VITRONIC
the machine vision people

State: 1.1

37.3 - Specific detailed system design for Moveable Observation Service

Project: 105798-DE NL RDW Observation

VITRONIC Dr.-Ing. Stein
Bildverarbeitungssysteme GmbH
Hasengartenstraße 14
65189 Wiesbaden, Germany
Management Board:
[redacted]

Phone + 49 611 7152 0
Fax + 49 611 7152 133
www.VITRONIC.com
sales@VITRONIC.com

Headquarters: Wiesbaden
Commercial Register:
District Court Wiesbaden
HRB 6119

TÜV PROFI CERT ISO 9001
73 100 189

Title:	Product Specification	Version	Confidentiality level
Reference:	37.3 - Specific detailed system design for Moveable Observation Service	1.1	Internal
Project Name:	NL RDW Observation		
Project Number	105798-DE		

Document Status			
Version:	1.1	Comments:	
Signatures:			
Produced/Revised by: [redacted] [redacted]	*Role in Project:* Managing Director VITRONIC NL, Deputy Local Project Manager Team Manager Technical planning and design	*Date:* 30.04.2025	
Reviewed by (VITRONIC): [redacted] [redacted]	*Role in Project:* Project Management Managing Director VITRONIC NL, Deputy Local Project Manager	*Date:* 30.04.2025.	
Approved by (VITRONIC): [redacted] [redacted]	*Role in Project:* Project Management Managing Director VITRONIC NL, Deputy Local Project Manager	*Date:* 30.04.2025	

Document History				
Version	**Date**	**Updated by**	**Status**	**Comments**
0.5		[redacted]	Closed	Creation of the structure based on the requirements. Generate text for the individual chapters
0.8	-	[redacted]	Closed	Feedback incorporated in accordance with the RDW Excel feedback list.
0.9	14.03.2025	[redacted]	Closed	Feedback incorporated in accordance with the RDW Excel feedback list.
1.0	10.04.2025	[redacted]	Closed	Feedback incorporated in accordance with the RDW Excel feedback list.
1.1	30.04.2025	[redacted]	Closed	Feedback incorporated in accordance with the RDW Excel feedback list.

Title:	Product Specification	Version	Confidentiality level
Reference:	37.3 - Specific detailed system design for Moveable Observation Service	1.1	Internal
Project Name:	NL RDW Observation		
Project Number	105798-DE		

Table of contents

1. A) DETAIL DESIGN AND OVERALL CONFIGURATION OF THE MOVEABLE ROADSIDE EQUIPMENT 7

1.1 Hardware Architecture 8

1.2 General aspects of the systems 20

1.3 Software Architecture 22

2. B1) ASSEMBLY INSTRUCTIONS MOVEABLE ROAD EDGE EQUIPMENT 31

3. B2) LOCATIONS AND SAFETY 35

3.1 Locations 35

3.2 Safety 36

3.3 Deployability 37

4. C) APPLICABLE STANDARDS AND GUIDELINES 39

5. ANNEXES 44

6. TECHNICAL DRAWING 44

Title:	Product Specification	Version	Confidentiality level
Reference:	37.3 - Specific detailed system design for Moveable Observation Service	1.1	Internal
Project Name:	NL RDW Observation		
Project Number	105798-DE		

Table of figures

Figure 1 Visualization of the detection areas of the sensors used in the moveable solution. Upper Drawing shows the bird's eye view of the scenario. Drawing below the side. 7
Figure 2 Principle of connection for sensor and antenna 9
Figure 3 Moveable Road Edge Equipment 11
Figure 4 Moveable Road Edge Equipment - Tripod leg 12
Figure 5 Movable Road Edge Equipment – Tripod Battery Pack 12
Figure 6 Moveable Road Edge Equipment – Tripod Mast connections 13
Figure 7 Moveable Road Edge Equipment – Mast height adjustment 13
Figure 8 Moveable Road Edge Equipment – Mast features 14
Figure 9 Moveable Road Edge Equipment – DSRC Antenna Typ Efkon 14
Figure 10 Moveable Road Edge Equipment – The intelligent Camera Subsystem (SSP-X1) solution for the Netherland Tolling 16
Figure 11 Moveable Road Edge Equipment – Illustration of the pan and tilt head 19
Figure 12 Software modules of the vehicle identification system 22
Figure 13 Overview of the software processes of the vehicle data processing 23
Figure 14 Example if a detailed vehicle view in the user interface. The page will vary for this project, because other data is used in this application 29
Figure 33 Login 31
Figure 34 Dashboard 33
Figure 35 Setup System Configuration dialog box 33
Figure 36 Measurement dialog box 34

Table of tables

Table 1: Product Specification Efkon Antenna 15
Table 2 Technical Data SSPX-1 17
Table 3 Product Features SSPX-1 18
Table 4 Requirements Annex 3.2 44

Glossary

ANPR	Automated Number Plate Recognition
APN	Private Access Point Name
CNN	Convolutional Neural Networks
CPU	Central Processing Unit
DSRC	Dedicated Short-Range Communicationn
ECP	External Communication Process
EETS	European Electronic Toll Services
GSU	Ground Supply Unit
HD	High Definition
HGVC	Heavy Goods Vehicle Charge
IEC	International Electrotechnical Commission
KPI	Key Performance Indicator
LF2	Flash
M-2-M	Machine-To-Machine
MAP	Mapping Process
MRSE	Movable Road Side Equipment
NIOSH	National Institute for Occupational Safety and Health
OBU	On Board Unit
OIDs	Object Identifiers
RDW	Dienst Wegverkeer
RWS	Rijks Water Staat
SNMPv2	Simple Network Management Protocol
SSP-X1	Smart Sensor Platform X1

TC5	Toll Checker 5
UTMC	Urban Traffic management and Control
VPM	Vehicle Passage Message
VPS	Virtual Private Server
Xsd	XML Schema Definition

1.a) Detail design and overall configuration of the Moveable Roadside Equipment

This document describes the solution for the moveable system in the Observation Service. The system will be used to detect passing vehicles, automatically recognize the numberplate and nationality of relevant passing vehicles, classify the vehicle as a truck and read out relevant information from the On-Board Unit (OBU.). The solution is based on the SSP-X1 product from VITRONIC. The central component of the SSP-X1 is an intelligent camera which can detect and classify vehicles from images acquired by the camera and uses a proprietary ANPR engine for automatic numberplate recognition. The SSP-X1 housing also contains a build in infrared flash, a mobile communication unit and a GPS tracker. In this project a DSRC subsystem following the EETS standard for communication with onboard units in vehicles is added. The collected data is then compiled to a vehicle record that will be send to a central system for further evaluation.

Process of vehicle data acquisition

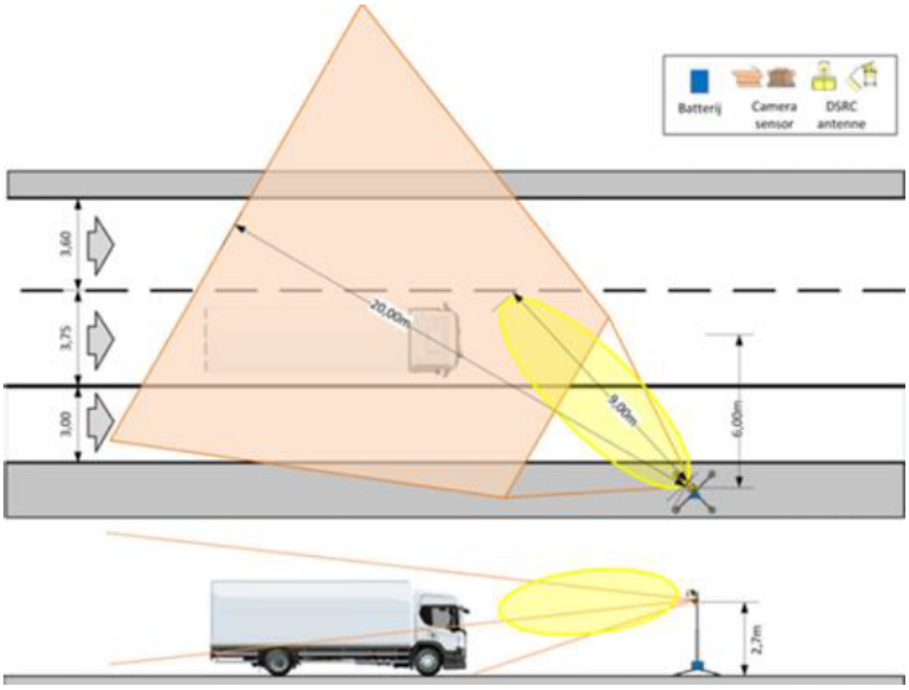

Figure 1 Visualization of the detection areas of the sensors used in the moveable solution. Upper Drawing shows the bird's eye view of the scenario. Drawing below the side.

Figure 1 Visualization of the detection areas of the sensors used in the moveable solution. Upper Drawing shows the bird's eye view of the scenario. Drawing below the side. shows the setup of the moveable solution containing an intelligent camera (Smart Sensor Platform X1, SSP- X1) and a DSRC-Antenna.

The SSP-X1 sensor covers the front, detecting vehicles that approach the system. The sensor continuously acquires high resolution color images. Every image is then analyzed to find areas showing vehicles. These areas of vehicles are further used to detect areas containing license

plates, read the text of the license plates and determine the country of registration. The detected picture areas showing the vehicle are also used to classify vehicles by their impression to decide whether they are above or underneath the 3,5t threshold. All non-essential photo content will be blurred, including all faces. The DSRC subsystem communicates with the onboard unit (OBU) mounted on the windshield of vehicles. The antenna will mainly acquire data from the first lane. On this set-up a DSRC antenna from Efkon is used (MLM-WAVE TRANSCEIVER 220 ML).

The battery housing, mounted on the hydraulic mast, contains a battery pack that powers the system for at least 12 hours. This battery pack is directly connected to the SSP-X1 sensor to ensure a reliable power supply. The battery can be charged during operation via with a 230VAC power connector. The DSRC antenna is also powered by the SSP-X1. Both power and data for the DSRC antenna are delivered through a hybrid connector, which combines the power and data cables into a single connection routed from the SSP-X1.

The data from all SSP-X1 sensors and the DSRC subsystem is collected by a software process within the SSP-X1 sensor and combined into a single vehicle representation dataset for each vehicle. In the next stage of software processing, the system saves the best images and evaluation datasets from the collected data.

If the classification result indicates a maximum allowable weight below 3.5 tons, the vehicle data is discarded. For Dutch vehicles, the classification outcome is cross-checked with the central license plate database of RDW.

Finally, the data acquired by the system is sent to the central system for further processing via a built-in mobile data router.

The Moveable Roadside Equipment is connected using mobile data technologies specifically designed for machine-to-machine (M2M) deployments. Data communication is cellular, utilizing LTE mobile technology, which is future-proof and capable of handling large data volumes. We employ a Dutch mobile provider (KPN) to ensure high placement flexibility and excellent national coverage. A private APN (Private Access Point Name) is implemented for enhanced security and controlled access.

Access to the private APN is restricted to registered SIM cards, providing an additional layer of security by isolating data from general mobile network traffic. This setup ensures controlled and restricted routing options, permitting communication only to and from trusted sources and destinations. Only predefined traffic types, ports, and protocols are allowed, further safeguarding the system.

A private APN enhances cellular data communication through a dedicated network path that securely connects mobile devices to the Internet or other networks. Unlike public APNs, which are shared among multiple users and prone to network congestion, a private APN delivers a more secure and controlled environment. This improves the reliability and speed of data transmission, while also allowing the implementation of advanced security policies.

Additionally, a private APN enables more efficient traffic management and better protection of sensitive data. It allows for customized network configurations, such as prioritizing specific data traffic or restricting access to certain services. These features make a private APN a robust solution for secure, reliable, and efficient cellular data communication.

1.1 Hardware Architecture

The hardware of the Moveable Roadside Equipment, designed for the Netherlands tolling scheme, can be divided into subsystems:

- A central processing system, which also includes the intelligent camera (SSP-X1)
- A subsystem for the DSRC antenna components

Both central and subsystems will receive power from the battery pack.

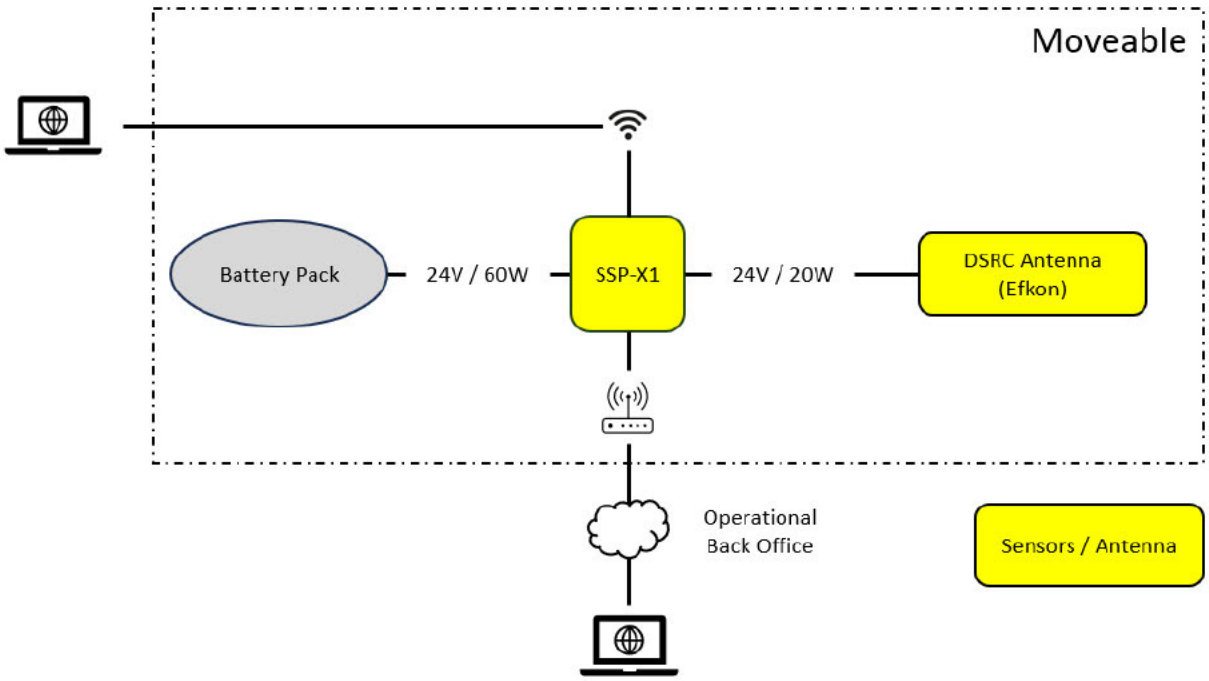

Figure 2 Principle of connection for sensor and antenna

Figure 2 Principle of connection for sensor and antenna illustrates the connection layout of the components. The central processing system is housed within the SSP-X1 sensor, which is powered by a battery pack located on the pumping mast, providing 12 hours of power. The battery pack can also be connected to a 230V external power source for added flexibility. The processing unit within the SSP-X1 manages the data interfaces.

The DSRC antenna is connected to the SSP-X1 using Power over Ethernet (PoE) and RS-232 interfaces and is powered via a hybrid connector that combines both power and data transmission into a single cable.

Moveable installed components

The Moveable Roadside Equipment, similar to the Fixed Roadside Equipment, includes the SSP-X1 and a DSRC antenna of the Efkon type. Additionally, the Moveable Roadside Equipment features a battery with minimum 12-hour power supply and a flexible tripod solution (see also ***Fout! Verwijzingsbron niet gevonden.***). The system is also equipped with a 220 / 230 volt power connection,

For all MSRE, we will include a power supply with a Schuko plug connection, allowing the MSRE system to be charged via a standard power outlet. Furthermore, it is possible to keep the MSRE operational while the battery is being charged.

Fout! Verwijzingsbron niet gevonden. shows the mast with the SSP-X1 and DSRC antenna. The flexible tripod construction allows the camera and DSRC antenna to be installed at a maximum height of approximately 3.4 meters. The operational high will be around 3.0-2.7 meters. The mast and tripod are primarily made of aluminum, ensuring that the total weight of the components, under 23 kg according to NIOSH standards, allows for installation by a single person. When retracted, the mast measures less than 1.5 meters, making it easy to transport. The design ensures that the mast can be operated without causing damage or contamination to the roadside. Additionally, the battery pack also weighs less than 23 kg.

The system includes a custom-made tripod base with a telescopic mast, offering flexible adjustments for uneven terrain. It is engineered to withstand wind speeds of up to 150 km/h, as confirmed by the supplier. The equipment can be safely set up, ensuring no damage or pollution to the surrounding area. This specification has been guaranteed by the supplier and validated by the engineering firm *Unverzagt*. This results in a substantial width of the tripod of around three meters. Although it would be possible to slightly decrease this width when we decrease the windspeed to 100km/h This would require substantial re-designing. This would also make the system more prone to vandalism.



Figure 3 Moveable Road Edge Equipment

Moveable Road Edge Equipment - Tripod Leg

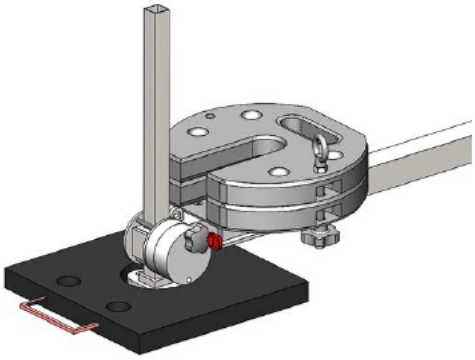

Figure 4 Moveable Road Edge Equipment - Tripod leg

The base plate, placed on the ground, features a milled insert. This insert allows each foot of the moveable equipment to be securely positioned into the base plate, preventing any slippage. The connection of the feet is further secured with a handle cover to maximize safety. Each of the three feet can be individually adjusted for leveling by up to 400mm. The support plate can be tilted, and the foot is positioned and inserted into the cut-out. Additionally, each leg is equipped with two individual weights, each weighing approximately 12 kg. This adds a total of 24 kg per leg, which is necessary to ensure the required safety. So, although a more or less flat terrain is preferable, the system is capable of handling substantial height differences

Moveable Road Edge Equipment - Tripod Battery Pack

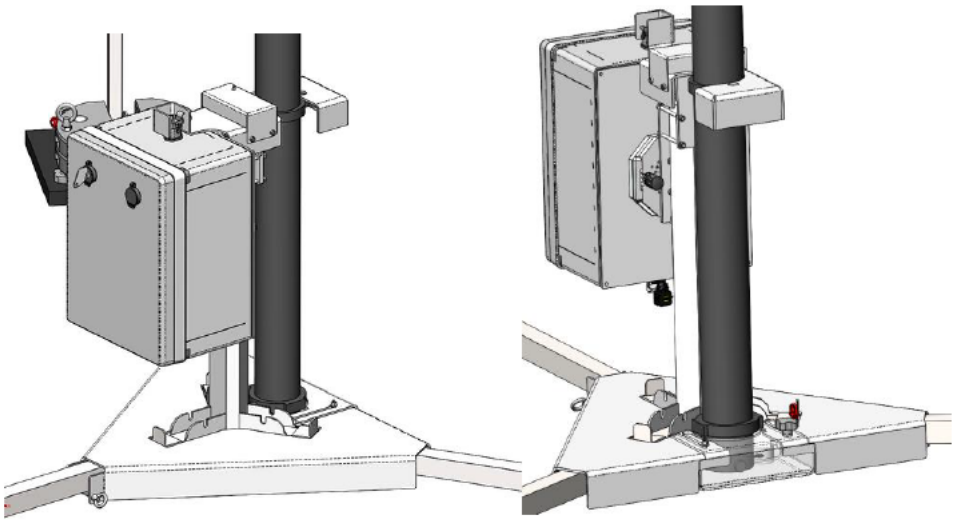

Figure 5 Movable Road Edge Equipment – Tripod Battery Pack

The tripod is secured at the bottom with a cover plate that protects both the mast and tripod from vandalism. This cover weighs 4 kg. The mast is fixed to the tripod using quick release fastening systems. The power unit weighs 20.4kg and consists of a cabinet comprising a 24V, 67Ah battery back.

The power unit is also secured to the mast with quick-release methods and provides power to both the sensor and the DSRC antenna. The top of the battery enclosure features vandalism protection at the connection point to prevent the cable from being removed during operation.

Moveable Road Edge Equipment – Tripod Mast connections

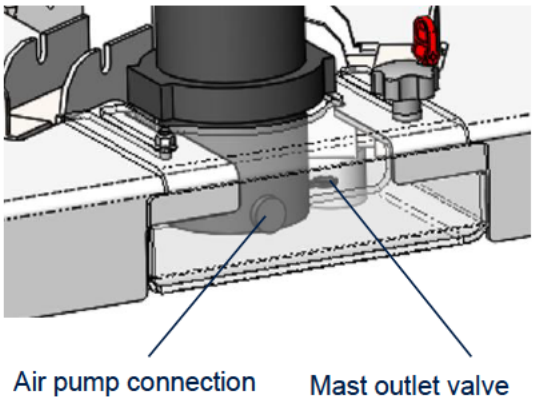

Figure 6 Moveable Road Edge Equipment – Tripod Mast connections

The cover plate also protects the air pump connection, where the air pump is attached to lift the mast. Additionally, the mast outlet valve is located on the right side of the mast. All connections are secured by the cover plate and further reinforced with a handle cover to maximize safety.

Moveable Road Edge Equipment – Mast height adjustment

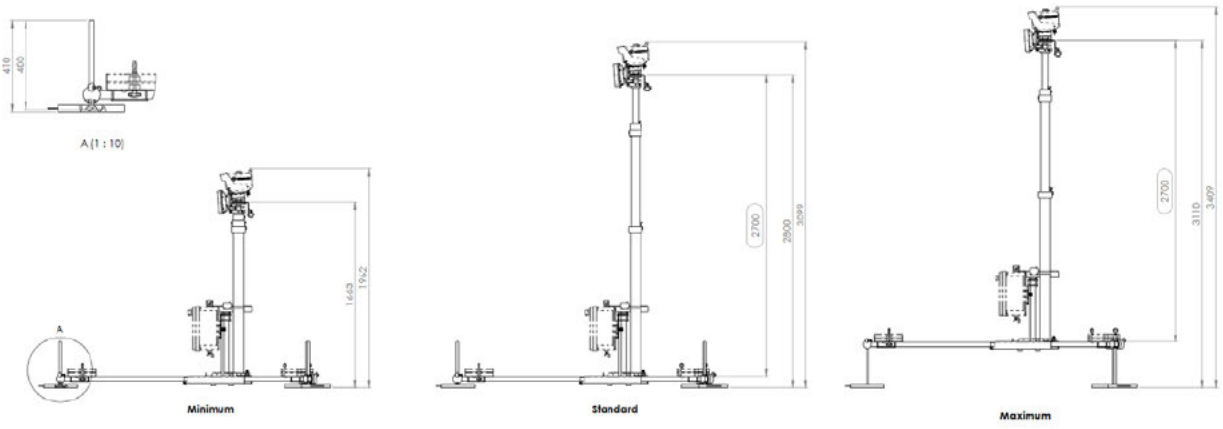

Figure 7 Moveable Road Edge Equipment – Mast height adjustment

The mast is raised using an air pump system. During the setup process on the tripod, it reaches an initial height of 1.6 meters, which simplifies installation. The mast can then be extended to a maximum height of 3.4 meters using a telescoping mechanism. For the Observation Service in the Netherlands tolling system, the standard operational height of the moveable unit is set around 3.0 -2.7 meters. This height is being evaluated in ongoing road tests to ensure it aligns with the placement of the onboard unit, which is located inside the truck cabins (see *Figure 1 Visualization of the detection areas of the sensors used in the moveable solution. Upper Drawing shows the bird's eye view of the scenario. Drawing below the side.*).



Figure 8 Moveable Road Edge Equipment – Mast features

The moveable mast features two telescoping poles that can be extended pneumatically. Each pole can be individually secured using safety handles and locks, providing protection against vandalism.

Moveable Road Edge Equipment – DSRC Antenna Type Efkon

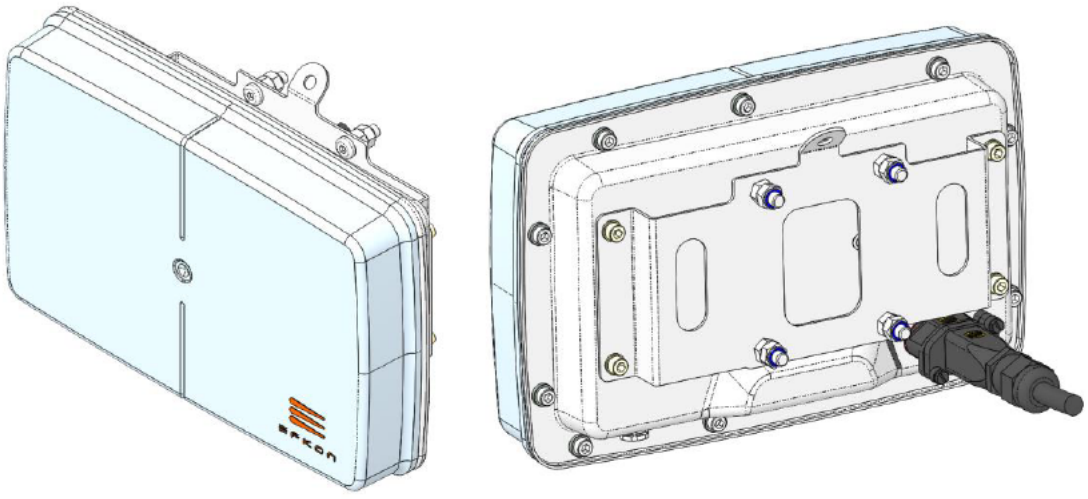

Figure 9 Moveable Road Edge Equipment – DSRC Antenna Typ Efkon

Figure 9 Moveable Road Edge Equipment – DSRC Antenna Typ Efkon shows the moveable DSRC antenna, which is connected to the SSP-X1 sensor. The DSRC antenna utilizes active transponder technology for short-range wireless communication. Operating in the 5.8 GHz band, it facilitates interaction with vehicles' onboard units (OBUs), supporting various protocols (e.g., EETS protocol) to exchange data and forward it to the customer as required. The antenna is

fully compliant with ISO 12813:2024, which features only minor differences from previous versions.

To optimize space at the installation site and eliminate the need for a second tripod, the DSRC antenna and its mount are affixed directly to the mast using a bayonet quick-release mechanism with an integrated lock for theft protection. For additional safety, the DSRC antenna and its mount are equipped with an eyelet to secure a safety cable, preventing accidental falls.

The following specifications have been tested and certified by our supplier Efkon:

Mechanical Data	
Dimensions	(L x H x W) 330 mm x 210 mm x 105 mm
Weight	3.7 kg
Mounting	Mounting bracket
Housing material	Stainless steel casing
Electrical Data	
Supply voltage	24 V DC
Power consumption	Max. 15 W
Protection class	III
Data interfaces	
Connection	Ethernet, 10/100 BASE-TX
Connectors	Single connector for power & data (rear connector)
Environmental conditions	
Operating temperature	-40°C to +60°C
Storage temperature	-40°C to +70°C
IP protection class (IEC 60529)	IP65
Product conformity	
Product safety / EMC	RED 2014/53/EU
Environmental Protection	RoHS 2011/65/EU
Recycling	WEEE 2012/19/EU

Table 1: Product Specification Efkon Antenna

The ideal lateral distance between the DSRC antenna and the first lane after the emergency lane to be covered is 6 meters for one lane. However, this distance is highly situational and depends on factors such as field conditions, the specific environment, the position of the OBU, the alignment of the OBU with the DSRC antenna, and other variables. In practice, with the Efkon antenna in Lelystad, we have successfully covered three lanes with a single antenna, even though only one lane was required. Based on this and the results from the first road tests conducted on the autobahn in Germany, we expect to achieve greater coverage and additional lanes. Considering these results and other experiences with this antenna within VITRONIC, we anticipate being able to reliably cover longer distances, although this remains dependent on the specific circumstances and conditions in the field.

Moveable Road Edge Equipment – The Intelligent Camera Subsystem (SSP-X1)

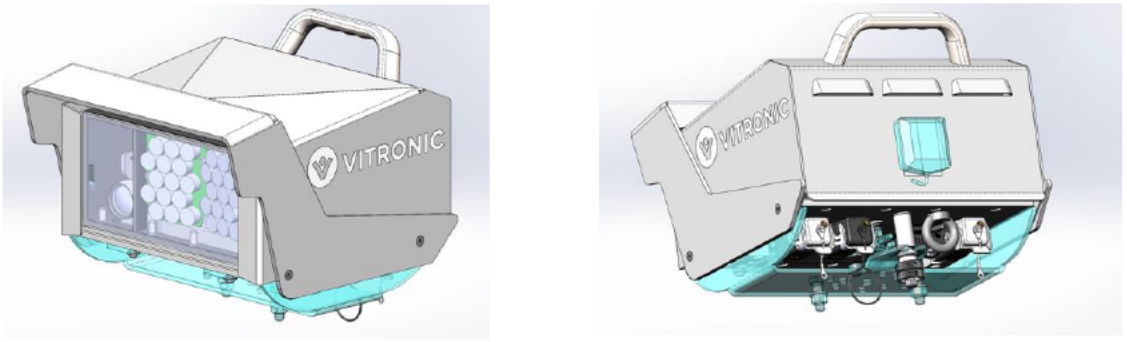

Figure 10 Moveable Road Edge Equipment – The intelligent Camera Subsystem (SSP-X1) solution for the Netherland Tolling

The Smart Traffic Sensor (SSP) features an infrared flash module with a wavelength of 850 nm, allowing for operation both day and night. It also includes a dedicated processor unit and a 16 MP camera. This is in line with the description in KSG1. The system automatically adjusts the daytime and nighttime illumination parameters to ensure optimal contrast under both conditions. Since no laser sensors are used for vehicle detection, system performance remains nearly constant during rain and moderate snowfall. An obvious exception occurs when snow covers the license plates, making them unreadable. The system generates 12-bit HDR images, enabling high ANPR rates even when plates are a mix of clean and dirty or during low-sun conditions. Its housing is designed based on a climate concept developed to ensure reliable performance in extreme weather conditions. The Smart Traffic Sensor is powered by a 24 V battery pack. The SSP-X1 also includes a GPS module and an LTE router. LTE provides more then enough bandwidth to cover the data communication during movable deployment.

The SSP-X1 is mounted at the highest point of the mast for the tolling system in the Netherlands. Its mount is securely fixed to the mast using a bayonet quick-release mechanism (See *Figure 7 Moveable Road Edge Equipment – Mast height adjustment*).

Mechanical Data	
Dimensions	(W x D x H) 251 mm x 281 mm x 237 mm
Weight	6.6 kg
Mounting	Screw mounting, adapter
Housing material	Aluminum
Pane	Glass
Electrical Data	
Supply voltage	12 - 24 V DC
Current consumption	5 – 2.5 A
Power consumption	Max. 60 W (incl. heating 20 W and LF2 15 W)
Protection class	III
Data interfaces	
Connection	Ethernet, RJ45
Environmental conditions	
Ambient temperature	-30°C to +60°C
Storage temperature	-40°C to +70°C
Relative humidity	0 to 95%, non-condensing
IP protection class (IEC 60529)	IP67
IK protection class (IEC 62262)	IK10
Operating altitude	< 2000 m above sea level
Product conformity	
Product safety	IEC/EN 62368-1
EMC	EN 55032
Photobiological safety	IEC/EN 62471
LED classification	Risk group 1 (low risk)

Table 2 Technical Data SSPX-1

Product features	
Camera	16MP, color or black/white
Lighting type	integrated flash module 850nm,30 High Power LEDs
Sensor	Global shutter CMOS sensor
Camera lens	8, 12, 16, 20, 25, 35, 50 mm Industrial C-Mount lens
Computer	NVIDIA Jetson Board Orin NX 16GB or Orin Nano 8GB
Operating system	L4T (Linux for Tegra)
Mass storage	SSD 128GB/ or SSD 2TB
Optional Cellular	LTE
Optional GPS	UBLOX-M8T
Optional Wi-Fi	Wi-Fi 6
Reliability	
MTBF	80.000 h
Pin assignment Power	
Pin 1	12 / 24 V System
Pin 2	12 / 24 V System
Pin 3	GND System
Pin 4	GND System
Pin 5	GP Input (3V-24V)/output (12V/24V) - e.g. external trigger

Table 3 Product Features SSPX-1

Moveable Road Edge Equipment – pan and tilt head

The moveable system features a pan and tilt head, enabling adjustments in 2-degree increments

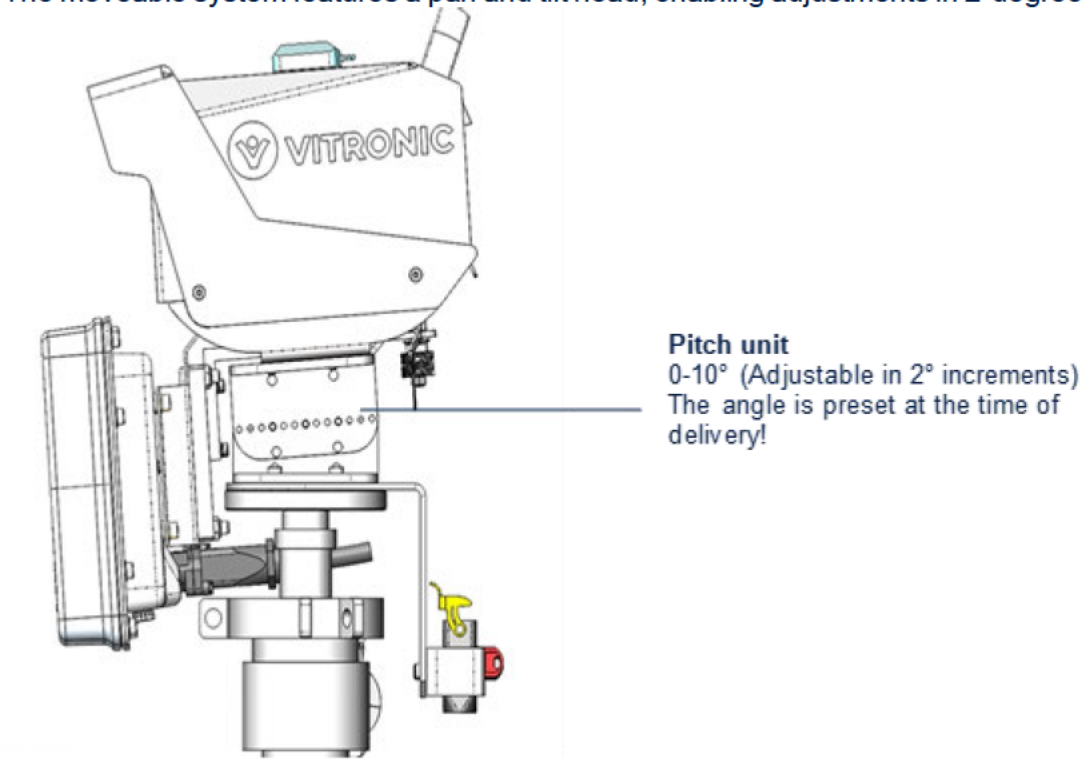

Figure 11 Moveable Road Edge Equipment – Illustration of the pan and tilt head

when needed. The angle is pre-set before delivery, ensuring that no adjustments are necessary during commissioning, which helps minimize the installation and setup time of the moveable system.

1.2 General aspects of the systems

Other specifications

Speed for moveable roadside system
The solution is specified for a vehicle speed range up to 160 km/h.

Moveable roadside system and congested traffic
The solution works in congested traffic conditions.

Requirements for the measurement site

The foot of the pole is ideally placed on a flat, hard surface with an area of 3 meters by 3 meters. Two of the foots are placed alongside the road resulting in a distance towards the road of ca. 1m.

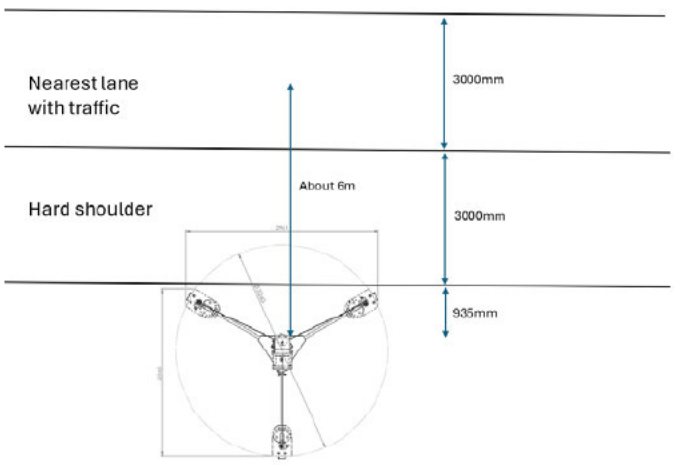

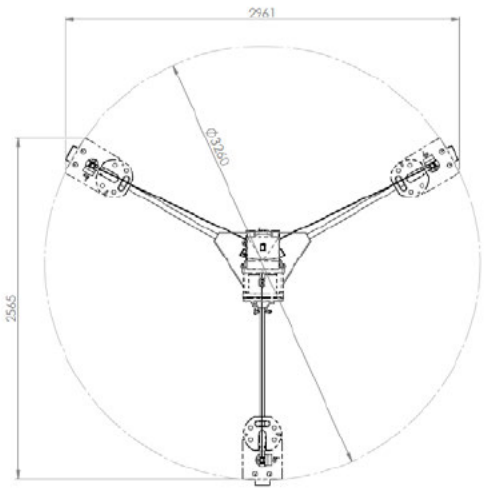

Weather conditions
The solution is specified to work under all weather conditions.

Moveable system and windspeeds
The Moveable Road Edge Equipment is capable of operating at wind speeds up to at least 150 kilometers per hour.

Supervised Lanes by Moveable Solution
The moveable solution will monitor the nearest lane or if applicable the rush hour lane. The maximum distance between the SSP-X1 and the lane to be covered is up to 9 meters.

Eye Safety of Roadside Equipment
The roadside equipment contains no sensors using laser. The eye safety of the flashed for illumination (Inside SSP-X1 sensor) is given.

Dimensions	(W x D x min H / max H) 2961 mm x 2565 mm x 1962 mm / 3049 mm
Weight	160 kg
Mounting	Freestanding, weighted with weights
Material	Aluminum / stainless steel / plastic
Supply voltage	24 V DC
Current consumption	4,2 A
Power consumption	Max. 100 W
Protection class	III
Connection	Ethernet, RJ45, WLAN, LTE 3G, RS485
Ambient temperature	-30°C to +60°C
Storage temperature	-40°C to +70°C
Relative humidity	0 to 95%, non-condensing
IP protection class (IEC 60529)	≥ IP65
IK protection class (IEC 62262)	≥ IK7
Operating altitude	< 2000 m above sea level
Product safety	IEC/EN 62368-1
EMC	EN 55032
Photobiological safety	IEC/EN 62471
LED classification	Risk group 1 (low risk)

Sensor type	173955-SSP-X1-V1.6-1.B16DA8.NF16F.23A2.8-1B-S1N5C1N1Y1
DSRC type	153270-Transceiver, Microwaves, 220-ML
Power Unit	175242-Power unit, LiPo, 24 V, 67 Ah, RS485, tube lock, quick-change adapter
Energy capacity	67 Ah / 24 V
Runtime	13,5 h by 100 W

1.3 Software Architecture

The software modules are divided between software which functions are used in the vehicle data processing path (vertical drawn modules in *Figure 12 Software modules of the vehicle identification* system) and software which is used for cross-section functionality.

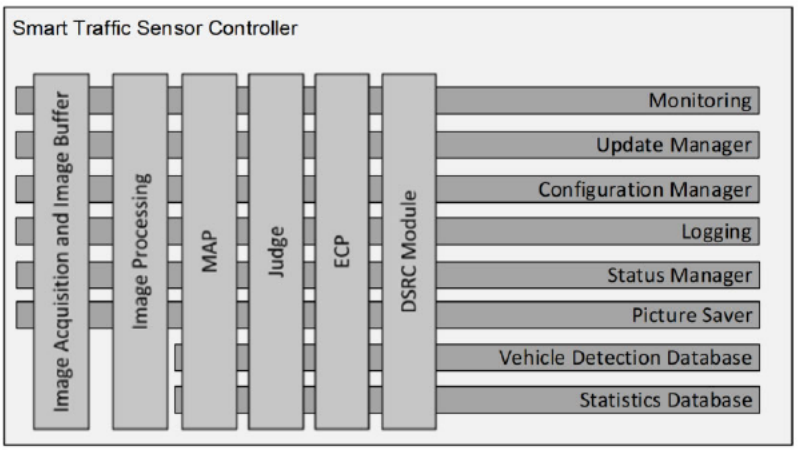

Figure 12 Software modules of the vehicle identification system

The system takes picture with a frequency of 10 Hz. These pictures are saved in an image buffer to keep pictures as long as it takes for the later processes to decide for the picture with the best view on the vehicle to be saved together with the vehicle passage data. The buffer can store 120 pictures, or store pictures for up to 12 seconds. *Figure 12 Software modules of the vehicle identification system* provides an overview of the software processes of the vehicle data processing.

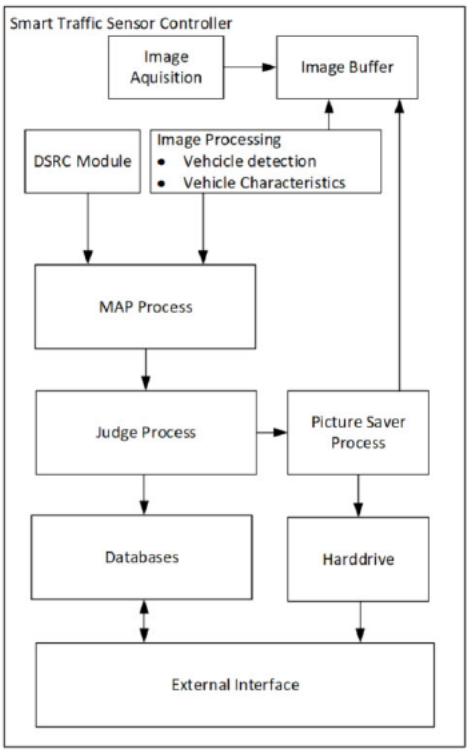

Figure 13 Overview of the software processes of the vehicle data processing

The images are also fed into a processing pipeline for vehicle detection and vehicle characteristic extraction. All image processing steps described in this section are based on Convolutional Neural Networks (CNN).

At first the system detects areas in the image, where vehicles can be found. These areas are rated in size and position in the image. Depending on these measures' areas qualify for further analysis of vehicle characteristics.

In this application the automated vehicle characteristic to be extracted is the license plate and vehicle class information. For the license plate, first the region of the license plate is detected and in a next step the license plate text and country of registration for the license plate is extracted from the region. The classification is based on the detected vehicle area in the picture and distinguishes between different vehicle types.

All information, the license plate region, the license plate text, and the vehicle class are fed into a list of vehicle data with corresponding characteristics. This list is kept in the application so it can be used when the process is again called with the next image taken by the camera.
Then, vehicle data is again extracted from the image but also bonded to data that corresponds to the same vehicle in real world of the computing step done before. This is achieved by comparing the vehicle detection area position and characteristics.

Using this method again on each picture taken by the camera tracks of vehicle data are generated by the software for each vehicle. This data is sent to the mapping process running on the site controller for further processing after each processing step.
The back office system contains a list of deployment locations. The device selects the right setting during deployment, using the GPS antenna.

1.3.1 Processing Steps

DSRC Process
In parallel the DSRC module communicates with the DSRC-OBUs of the passing vehicles. The data retrieved from the vehicle is stored in the database and also sent to the mapping process.

MAP Process
The mapping process (MAP) correlates vehicle data from the image processing with the data from the DSRC module, using time and location information gathered from both modules during the pass of the to be controlled vehicle. For EETS-DSRC data the license plate information of the DSRC data and the reading on the images is also used for data matching.

Judge Process
The Judge process finds the best vehicle position for case data images and the best suitable license plate text in the list of vehicle records. This is done using the confidence of the reading result and the distance of the vehicle to the detection sensor. The judge process also reduces the vehicles classification information to the number of classes necessary for the application the SSP-X is used for. In this application vehicles with a permissible total weight below 3.5tons, exceeding 3.5 tons, camper and busses are distinguished. The judge process triggers the Picture Saver Process to save the best image for each vehicle passage out of the buffer for pictures in the smart traffic sensor. The area in the image, where a vehicle was detected, will be marked by a frame in the image. The Judge process also preventively saves pictures before they are deleted in the buffer on the smart traffic sensor in case a passage takes longer time then the buffer can store the pictures.

The timestamp used for the case data (VPM) is the timestamp when the overview front image was recorded. The lane information is also extracted from the overview front image. For the lane information the lane template image, which is available for each camera and defines lanes by their markings on the road is used. The position of the vehicle area detected in the overview image will then be used.

ECP
The external communication process implements the data interface for case data records (VPS).

The ECP uses the UTMC protocol for data transmission.

The UTMC protocol is described on the website with the technical specification of the UTMC protocol. We are using SchemaVersion 1.2 which is also used in the latest guidelines where the usage and dataflow is described: We are using the UTMC ANPR protocol – A UTMC Technical Guide Library reference UTMC-TR007.002.

We slightly modify the xsd to enable the use of special characters in the license plate text. If a strict xsd should be used, the license plate can be set additionally with whitespaces etc. in a manufacturer specific node. All information which does not map to an existing field of the UTMC dataset is given within manufacturer specific nodes which is the in the UTMC standard proposed way for these additional information's (like DSRC data).

1.3.2 Cross-Sectional Software Modules

Monitoring:
The monitoring interface of the TC5 is implemented as SNMPv2 tables and notifications. Every significant value from the system is evaluated by a test, either by thresholds or regular expressions. One or more groups are grouped by an alarm that evaluates the corresponding test status and adopt the worst status as their own. Every change in status of an alarm trigger a SNMP InformRequest containing the later specified alert message to the configured receiver by SNMPv2c.

The alarms have a structured name that may be used for identification. When adding additional alarms to the configuration, OIDs may change, the alarm names stay the same to guarantee compatibility.

Update:
The software update is realized by a component in the central system and a component on the SSP-X1 computer. The update is divided in two steps to reduce downtime during software update.

The first step is uploading the software. During this step the software is still operational. After the upload is finished the software is installed automatically on the SSP-X1 sensor. Afterwards the new software starts automatically. During update step the state of the system will change to Update state.
Updates will be performed outside of the operational window of the specific set of moveable equipment

Status management:
The states of the system are divided in two types. One is the system state which is an overall status information of the system. In addition, there are several operating states, which display different states the system is operated in.

System state:
The system implements a system state which can have the following states:

- **Online:** System run without error of component that are part of the case data generation or case data transmission
- **Limited:** The system detects at least one error of a component that is part of the case data generation or case data transmission
- **Fault:** The system detects a critical error of a component that is part of the case data generation or case data transmission
- **Boot:** The system is booted. This state is used in the shutdown and the startup section of a boot.
- **Standby:** The system is set into standby modus by an operator. In this state all computers are switch off. The router and the main hardware controller module are still running, this the system can be switched on remotely. During startup after standby the system reports the status boot.
- **Power failure:** The system is shut down because of a power failure. During startup after a power failure the system reports the status boot.
- **Update:** The system is shut down because of a software update. During startup after software update the system reports the status boot.

- **Temporarily not active:** Has to be set by an operator. The system runs and thus creates monitoring information on the health of the hardware but does not create case data files.
- **Unknown:** Reserved for a system state where the system cannot determine a system state.

System states related to the health information
Health information report the functionality of the system relate to case data creation or transmission. These states are online, limited and fault.

The status online is created if none of the rules for status limited or fault apply. This does not mean that there are no errors in the system. If there is for example an intruder alarm system, and an error is reported for that system, the state will still be online, because the intruder alarm system does not participate in case data creation or transmission.

States related to the restart of the system
States related to the restart of the system are boot, standby, software update, power failure
Req: There are several options for booting the system using the user interface

- Restart software of site controller and subsystems
- Restart software of site controller without subsystems
- Restart the site controller together with all computers of subsystems.
- Restart the site controller without computers of subsystems.
- Restart the site controller together with all computers of subsystems and switching the power of all computers on/ off during boot
- Restart the site controller without computers of subsystems and switching the power of all the site controller on/ off during boot
- Activating the standby modus which shuts down the system and switches of all components except for the router and the main hardware controller module.

During configuration update of the software of the site controller the system also goes in the status boot.

During the shutdown and startup process of all states related to the restart of the system, no wrong monitoring error are to be created. Means that the monitoring has to be stopped and the shutdown state set during shutdown before the system start stopping processes and switching off hardware. Also, the monitoring must be switched off and the status boot has to stay during startup as long as all processes need to be started and operational.

During the shutdown and startup process of all states related to the restart of the system, no incomplete cases that are related to shutdown of the restart are to be created or reported in statistical data. Means that the data processing must be stopped in a central process shutdown before the system start stopping processes and switching off hardware. This must be done for all datatypes as vehicles data or DSRC data. Also, the data processing must be started for all data acquisition processes in a central process during startup as long as all processes need to be started and operational.

Operating states:
The system implements the following operating states.

- **Maintenance:** Maintenance is done on the system. The state reports, that there possibly will be errors seen in monitoring and statistics data. To remove time of maintenance from report done on this data, a maintenance state is implemented.

- **Remote maintenance:** Some is remotely connected to the system. This state simply reports the fact that someone is remotely connected to the system. Spek: How is this state detected?
- **Upload On/ Off:** This state is taken, when software, configurations, or ground truthing data is up- or downloaded from the system. This state automatically suppresses all system reboots of the site controller.
- **Recording of ground truthing data:** This state is taken when ground truthing data is recorded. In this state the maintenance state cannot be activated, thus no actions are possible on the system. During recording of ground truthing data the diagnose modus of the system is automatically activated, so that all datasets are recorded.
- **Normal Modus/ Diagnosis Modus:** In diagnosis modus all detected vehicles are saved. In normal modus the minimal datasets necessary to provide the requirements of the system are saved. No logfiles with data that can be correlated to persons as for example license plates are stored in logfiles. These two modes are described in detail in the chapter case data management. The change of these modii do not only influence the writing of data but also change the how case datasets are deleted.

All states persist after reboot.

The operating states are reported in the overall monitoring system.

Logging
Logging is used on behalf of the third level support from the development team. For first and second level support the monitoring system is used. The user interface has options to download logfile packages. These packages will be encrypted.

Behavior during power failure
The system has a battery When the batterie shows low voltage, the system shuts down and messages related to low power are generated. Stored data are retained on the hard drive (REQ-197)

Configuration Management
The configuration management takes place in the back-office system and the roadside system. It mainly deals with the change of the software configuration on the roadside system. There are two different categories:

- Configurations that differ between sites,
- Configuration that are equal for all sites.

All local configurations will be saved in the central system, so that they are available if the main computer fails.

1.3.2.1 Image Saver

The following images are saved for each dataset:

- Overview image: An overview image showing the scene containing the captured vehicle. Vehicle Image: Image extracted from the overview image which contains the section where the vehicle is detected only. For a better visual impression, the area will be enlarged.
- License Plate position: the position where the system detects the license plate of the vehicle will be saved as an extra image.

Images are stored in jpeg compression. The compression rate is such, that the important features of each image type will be recognizable.

Overview image: Area around detected vehicle
The area around the vehicle is blurred in the overview image for data protection purposes.

Image area with windshield blurred
The windshield area is detected and blurred to anonymize passengers

1.3.2.2 Case data management

Hard drive storage capacity

The case data management deals with the way case data are saved and deleted. In this project only data of vehicles categorized as truck will be saved. All other vehicles will be counted in statistical data but will no other data or pictures be saved. Data of vehicles categorized as truck will be deleted immediately after being successfully sent to the central system.

Till there is a requirement of collecting data of vehicles during ground truthing and there might be the necessity to view all vehicle for problem management purposes, there will be a possibility to switch the system to Diagnosis Mode to view all detected vehicle cases in the database.

Hard drive storage capacity
The hard drive of the site controller has enough disk space to store case data including images for all vehicles classified as trucks for at least 12 hours in the event of a communication failure with the back office.

External data interface

The data is transmitted over the LTE network. The data interface is similar to that of the fixed system, as described in the generic document under section 3.1 c I 'Data Traffic'.

Graphical User Interface

The graphical user interface is divided into four sections:

- **Monitoring section:** In this section monitoring and statistical data can be viewed. Additional information about configured DSRC-keys or asset management data will be also shown in this section.
- **Case Data section:** In the case data section vehicle data collected by the system are viewed. There is a detailed for each vehicle (see *Figure 14 Example if a detailed vehicle view in the user interface. The page will vary for this project, because other data is used in this application*).
- **Service section:** In this section actions can be triggered. These actions are for example a reboot of a hole or a subsystem, download of data for analyses or starting the collection of ground truthing data.
- **Configuration section:** In this section the configuration of the site can be changed.

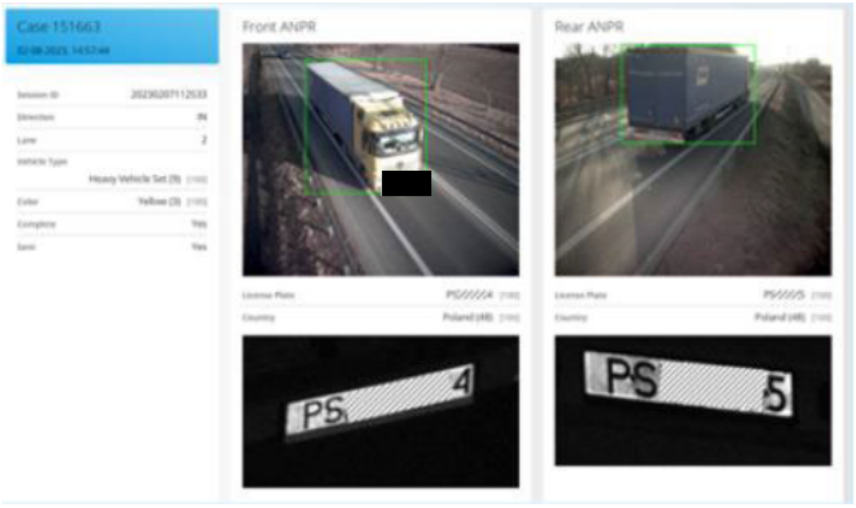

Figure 14 Example if a detailed vehicle view in the user interface. The page will vary for this project, because other data is used in this application

1.3.2.3 Cryptography and Security

The hard drive of the site controller containing vehicle data is encrypted using a Linux decryption tool. Thus, the vehicle data can only be access with a password for the computer. The key for the Linux decryption tool is saved in the Trusted Network Platform of the PC. The cryptographic algorithm used for disk encryption is AES-XTS, with a key length of 256 bit.

Measures against connection of unauthorized systems

- All connections of the roadside system to the central system are secured so that there is authentication in both directions.
- All Hubs have a door opening connector to detect unauthorized opening.
- All access to hardware with a user interface is secured by a password.

2.b1) Assembly instructions Moveable Road Edge Equipment

Transferred to the Placement Protocol Setting Up the System

After the Moveable system has been installed, the system has to be set up.

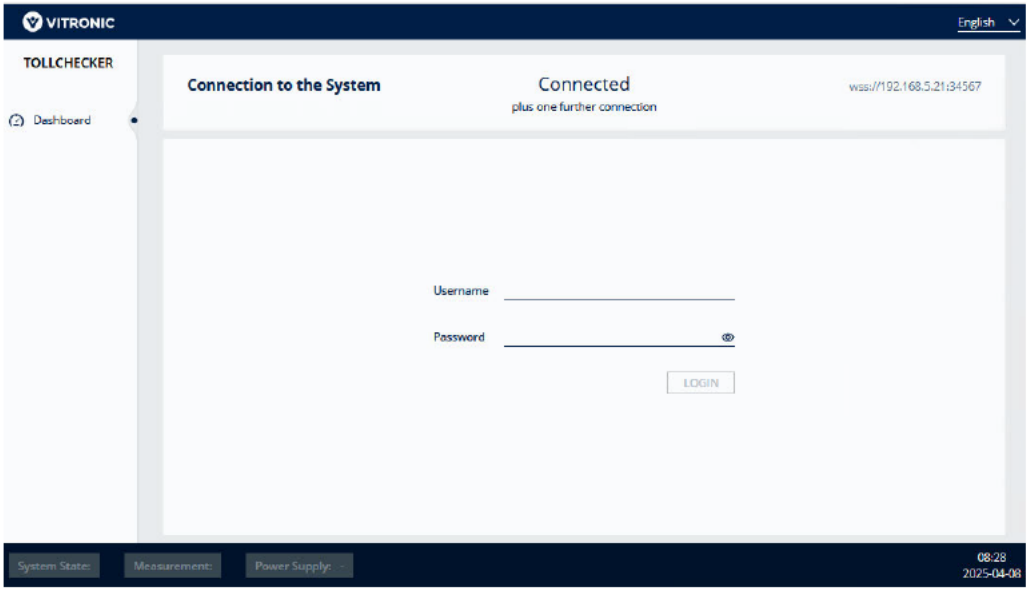

Figure 15 Login

- Switch on Wi-Fi on the service laptop.
- Open the web browser.
- Enter the IP address of the system: 192.168.5.21
- Call up the following port: 34567
  - The browser displays a warning message.
- Click the *Accept risk* button.
- Call up the following port: 8080
  - The browser displays a warning message.
- Click the *Accept risk* button.
- Call up the following port: 3000
  - The browser displays a warning message.
- Click the *Accept risk* button.
  - The *Login* window opens.

Title:	Product Specification	Version	Confidentiality level
Reference:	37.3 - Specific detailed system design for Moveable Observation Service	1.1	Internal
Project Name:	NL RDW Observation		
Project Number	105798-DE		

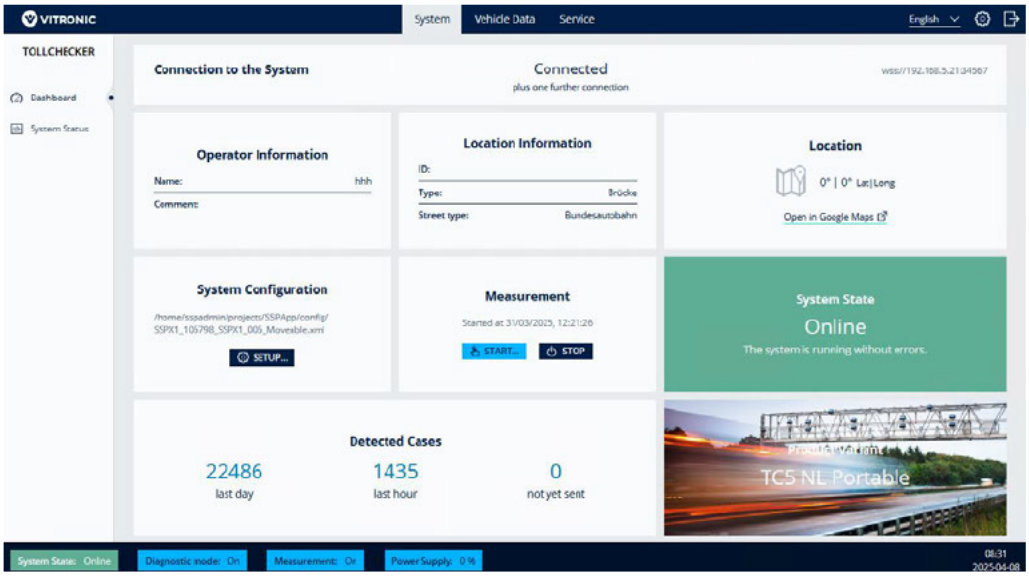

Figure 16 Dashboard

- Enter username and password and click the *LOGIN* button.
  - You are logged in to the system and the dashboard is displayed.

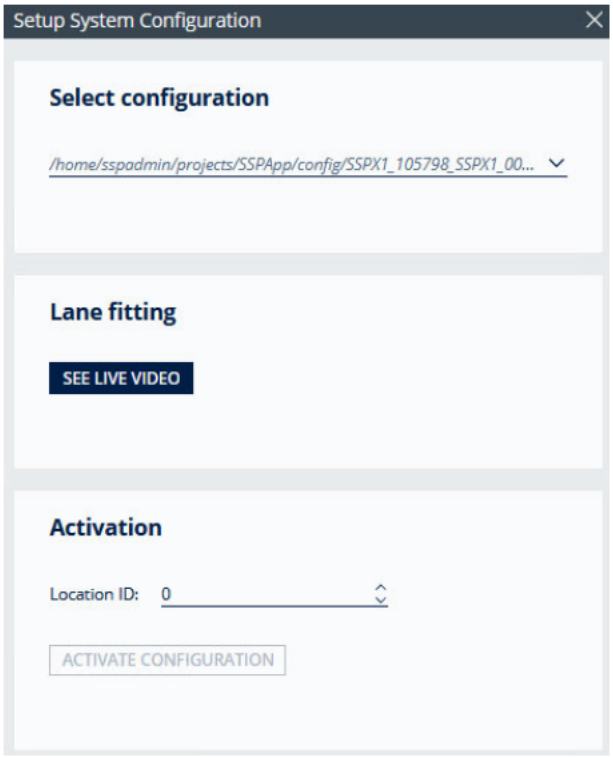

Figure 17 Setup System Configuration dialog box

- In the *System Configuration* section, click the *SETUP* button.
  - The *Setup System Configuration* dialog box opens.

- Click the *SEE LIVE VIDEO* button.
  - A live video stream from the location showing the camera's field of view is displayed.
- Adjust the Moveable system based on the live video stream for optimum vehicle detection.
- In the *Measurement* section, click the *START* button.
  - The *Measurement* dialog box opens.

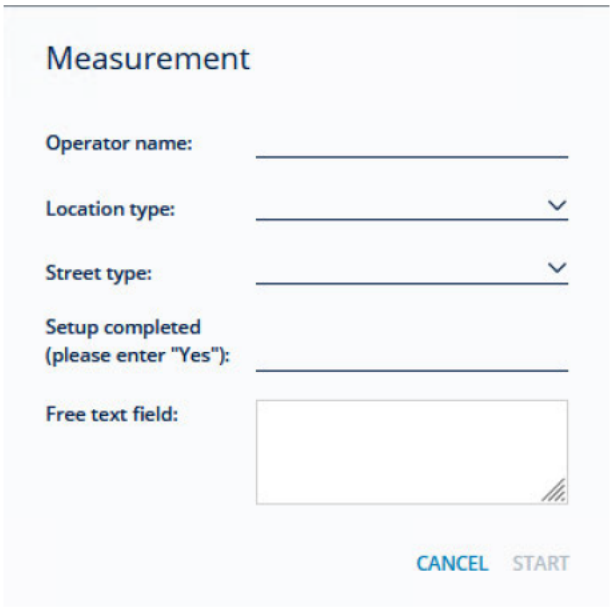

Figure 18 Measurement dialog box

- In the *Operator name* field, enter the operator name.
- From the *Location type* dropdown menu, select the location type: *Bridge* or *Roadside*.
- From the *Street type* dropdown menu, select the street type: *Federal Highway* or *Federal Road*.
- In the *Setup completed* field, enter *Yes*.
- Optionally, you can enter free text in the *Free text field*.
- Click the *START* button.
  - The measurement starts.

3.b2) Locations and Safety

3.1 Locations

In the tender material it is stated that the road sections that can serve as Variable Observation Locations are national and provincial roads, so no roads owned or managed by other road owners like municipalities. National roads are managed by RWS and are designated by either an A number or a two digit N number. Provincial roads are managed by the (12) provinces and are designated a three digit N number.

In REQ's-1679 and -1816, a clear set of criteria to which selected deployment locations should adhere is listed.

Indicated as suited and desirable are:

- Behind a guard rail
- On a flat area on the verge adjacent to the carriageway
- The location can be reached from the public road after crossing a maximum of 20 meters of unpaved terrain
- The movable RSE can be safely installed and removed
- If possible the moveable RSE shall be placed from a parallel road adjoining the Road Section.

Indicated as not suited are:

- Entrance or exit ramps
- A Hard shoulder of a National road
- Within 400 meters from the entrance of a tunnel
- On a bridge or viaduct
- Near entry or exit lanes

From this list of do's and don't it can be derived that for the selection of enough potential location the following three criteria, preferably combined, are:

- Flat terrain
- Behind a guardrail
- Accessible from behind

Our proposal is to use as a rule of thumb that no location that does not meet at least two of the criteria will be selected, except in situations where it can't be avoided. The procedure to select locations is addressed in the Implementation- and Exploitation plans.

Permits and permissions

When it comes to permits and permissions we are dealing with three sets of obligations:

1. To be allowed to stop at the emergency lane, for instance to offload equipment, one needs an exemption from the Dutch road regulations. RDW already took care of this exemption and VITRONIC only needs to list the numberplates of the cars it is going to use for deployments to get the individual plastic exemptions per vehicle.
2. No permit need from a road owner perspective is mentioned in the tender but it clear by now a permit might be needed. RDW is clarifying this situation.

3. At least 10 days before an actual deployment VITRONIC needs to notify the proper authorities of an actual deployment to check if the deployment is possible. This process needs to be repeated at the day of the actual deployment.

Operation agreements have to be reached with the road owners with regards to an efficient process.

This also is of major importance for safety in general because combining the three means that the equipment can't be hit by any vehicle except extreme circumstances. It also means our staff does not have to stop at an emergency lane , nor having to cross the guard real several times to pick up the components of the set. Last but not least it speeds up the installation process because there is no need to compensate for slopes and / or uneven terrain.

3.2 Safety

The VITRONIC Safety plan, already submitted and approved by RDW, also covers the deployment of movable equipment.
This safety plan applies to the activities during the realisation and exploitation phase of the project in the Dutch road infrastructure. These are the activities that are required for:

- Installing, testing and maintaining the fixed observation at the contracted locations
- The deployment (placements) of the mobile observation at the locations included in the camera plan.
- Any other activities (area inspection, necessary investigations, etc.) along the roads related to the above activities.

This document applies to all employees, subcontractors and parties managed by VITRONIC. This document also provides RDW, RWS and other external stakeholders with insight into the approach to Occupational Health and Safety in this contract.

The focus is on preventing accidents, compliance with laws and regulations (such as ARBO) and creating a safe working environment for all involved. Safety management is set up according to the recognized standards and procedures, including the safety management system VCA (Safety, Health and Environment Checklist Contractors), and is coordinated with the processes of subcontractors and VITRONIC.

There are two major differences between safety when working on fixed equipment and deployment of mobile equipment.

Firstly, the emphasis for fixed equipment is on the Implementation phase, in which at least the majority of the fixed equipment is installed. During the Operational phase, there is only maintenance, in which the same safety standards are of course applied. Secondly, the risk profile when working on fixed installations is higher because this also involves working at height and with electricity.

For mobile equipment, it is mainly about the Exploitation phase, in which the daily deployment activities take place, this of course apart from the test activities during Implementation. If the three location criteria as discussed earlier apply, there is a relatively low risk profile. The greatest risk arises here if a stop has to be made on the hard shoulder and components have to be

transported from the trailer to the actual installation location or vice versa. The duration of this activity should be limited as much as possible. Risk-limiting measures are in any case:

- Optimal design of equipment to enable a minimum of operations
- Considering installation with two people, with an optimal division of labour
- As little activity as possible in the dark
- Equipment at one location for a longer period of time
- Clear job description and training in a safe location before personnel are deployed.

Based on an approved CR, SkyToll assumes responsibility for the specific activities and, together with its Dutch partner, introduces its own safety management system, which is tailored to the project and the activities on, along and in the vicinity (work area and free space) of the road. SkyToll's systems and reports will be integrated with VITRONIC's processes to ensure consistency in safety. SkyToll's /Partner's safety system is leading in this and is also tailored to Dutch legislation and regulations.

3.3 Deployability

Like we indicated before the strong preference is to deploy the MRSE in situations where the equipment can be placed behind a guardrail. Along Dutch motorways, managed by RWS, there will always be a guardrail. This is different on the so-called N-roads, managed by the 12 Dutch Provinces.

Given the design of the MRSE, there are some limitations to the possibility to deploy the equipment along N-roads where there is no guardrail always in place.

Also, the maximum effective range of the DSRC antenna constitutes a potential limitation.

While the potential lack of a guardrails and the obstacle free zone requirement present challenges, they do not necessarily prevent the deployment on N-roads. Based on the experience from Connection Systems it became clear that there are often other objects along those roads, like for instance trees, that can serve as safety cover for MRSE. So, it highly depends on the exact location.

We have made some calculations with regards to the range of the DSRC antenna in relation with expected deployment locations.

Distance between sensor and middle of the first lane
Center tripod to the edge legs = roughly 90cm (based on diameter)

Obligatory free space between the object and the guardrail = 50cm (exception)...100cm (most common)

Guardrail width = roughly 90 cm

scenario A: Tarmac between first lane and guardrail (when there is no emergency lane, usually the N roads) = 50cm
scenario B: Emergency Lane width = 250 ... 350 cm

Total scenario A = 90 + 100 + 90 + 50 = 330cm*
Total scenario B = 90 + 100 + 90 + 350 = 630cm*

**This is a general calculation, there are a lot of exceptions (where the distance is less or more)*

This is all within the proven range of the Efkon antenna. We are currently performing performance testing in Germany with the MRSE to get real live traffic results.

4.c) Applicable standards and guidelines

This chapter classifies the applicable standards and guidelines and describes how our process and system design complies with these requirements. It shows which standards are relevant to the project. It also explains the way in which our design complies with these standards and what measures have been taken to ensure full compliance.

ISO 12813:2024 defines requirements for short-range communication for the purposes of compliance checking in autonomous electronic fee-collecting systems.
ISO 12813:2024 is fulfilled.

NEN-IEC 62443-4-1:2018 describes safety for industrial automation and control systems. The fourth part describes the life cycle of safe product development.
An internal guideline for 'Safe Development' is applied at VITRONIC. It is currently being checked whether this guideline complies with the specified standard in all points and the internal guideline will be adapted if necessary.

IEC 62443-4-2:2019 describes the safety of industrial automation and control systems. Part 4-2 describes the technical safety requirements for IACS components.
The standard is currently being analyzed to ensure that all standards are fulfilled in the system.

ISAE 3000 is a report that proves that the organization handles data correctly and in accordance with the General Data Protection Regulation. ISAE 3000 recognizes two types of reports. The Type 1 report demonstrates that an organization has the correct controls and procedures in place. An auditor will report that the controls are appropriate to the activities.
With the type 2 report, an auditor will check whether the organization also complies with the procedures and controls from report 1.
The further procedure for implementing the described standard is currently being coordinated with our auditor.

ISO 3166-1-Alpha-2 is a standard for the coding of geographical units.
ISO 3166-1-Alpha-2 is fulfilled.

ISO/TS 19299:2020 is used by developers of electronic fee collection (EFC) systems to test security-relevant functions and requirements.
Our delivery products are tested for compliance with ISO/TS 19299:2020 and adapted if necessary.

EN 15509 IAP 1.1:
EN 15509 is a European standard that specifies the requirements for dedicated short-range communication (DSRC) systems used in electronic fee collection. The IAP (Interoperability Application Profile) 1.1 refers to a specific version of the application profile ensuring interoperability between different DSRC systems across Europe. It defines the DSRC profiles necessary for communication between on-board equipment and roadside infrastructure to facilitate electronic tolling. The system will be tested against EN 15509 IAP 1.1.

CEN/TR 16968:
CEN/TR 16968 is a technical report that provides a security assessment framework for electronic fee collection (EFC) systems. It offers guidelines for evaluating the security aspects of EFC systems, including potential threats, vulnerabilities, and risk mitigation strategies. This

report assists stakeholders in understanding and implementing appropriate security measures to protect EFC systems from various security risks. CEN/TR 16968 will be considered in the security plan for all systems.

The ISO standard **ISO 10007** entitled 'Quality management - Guidelines for configuration management' provides instructions for the application of configuration management within an organization.
It will be verified that the internal standards applied at VITRONIC fully comply with this standard.

ISO 14001 is an international standard for environmental management systems designed to reduce and improve the environmental impact of organizations.
ISO 14001 is fulfilled.

ISO-14906 specifies an application interface for electronic fee collection (EFC) systems, which is based on dedicated short-range communication (DSRC). It supports interoperability between EFC systems on an EFC-DSRC application interface level.
ISO-14906 is fulfilled.

The **ISO/IEC 15288** Systems and software engineering — System life cycle processes is a technical standard in systems engineering which covers processes and lifecycle stages, developed by the International Organization for Standardization (ISO) and the International Electrotechnical Commission (IEC).
The implementation of ISO 9001 in combination with the internal WIKI platform and the VITRONIC process landscape fulfils the requirements of ISO/IEC 15288.

ISO-27001 is an international standard for managing information security.
The further procedure for certification is currently being organized with SkyToll.

ISO-27002 is an international standard that contains recommendations for various control mechanisms for information security.
The further procedure for certification is currently being organized with SkyToll.

ISO-27005 describes the risk management of information security.
ISO-27005 is fulfilled.

ISO 9001 is an international standard for quality management systems.
ISO-9001 is fulfilled.

Standards and ISO standards (NEN 1010 + C2)
NEN 1010 + C2 standard is used for low-voltage electrical installations.
Our delivery products are tested for compliance with NEN 1010 + C2 and adapted if necessary.

Standards and ISO standards (NEN-5096)
NEN-5096 is used for burglary resistance. Requirements, classification and test methods are described for roof or wall elements with doors, windows, shutters and fixed infills.
NEN-5096 is fulfilled.

Standards and ISO standards (NEN-EN 50102)

NEN-EN 50102 is used for degrees of protection of enclosures for electrical equipment against external mechanical impacts (IK coding). NEN-EN 50102 is fulfilled.

Standards and ISO standards (IEC-60529)
IEC-60529 is used for degrees of protection of enclosures of electrical equipment (IP coding).
IEC-60529 is fulfilled.

Standards and ISO standards (NEN-EN-IEC 60898-1)
NEN-EN-IEC 60898-1 defines the circuit breakers for alternating current in electrical installation devices for domestic and similar purposes.
NEN-EN-IEC 60898-1 is fulfilled.

Standards and ISO standards (IEC-61439-1)
IEC-61439-1 describes the general rules for low-voltage switchgear and control gear assemblies.

IEC-61439-1 is fulfilled. Our systems comply with IEC/EN 61010-1 and in part with IEC /EN 62368-1 (electrical safety is therefore guaranteed).

Standards and ISO standards (NEN-EN-IEC 61969-1)
NEN-EN-IEC 61969-1 describes design guidelines for mechanical constructions for electrical and electronic equipment - outdoor enclosures.
Our delivery products are tested for compliance with NEN-EN-IEC 61969-1 and adapted if necessary.

Standards and ISO standards (NEN-EN-IEC 62305-2)
NEN-EN-IEC 62305-2 apply the risk assessment of a structure due to lightning strikes to the earth. Its purpose is to provide a procedure for assessing such a risk. Once an upper tolerance limit for the risk has been established, this procedure allows the selection of appropriate protective measures to reduce the risk to or below the tolerance limit.
The equivalent standard IEC 61969-1 is already in use. Our delivery products are tested for compliance with NEN-EN-IEC 62305-2 and adapted if necessary.

Standards and ISO standards (NPR 8110)
NPR 8110 describes the risk classification for surge protection.
Our delivery products are tested for compliance with NPR 8110 and adapted if necessary.

Standards and ISO standards (NEN-3140)
NEN-3140 describes the operation of low-voltage electrical installations.
Our delivery products are tested for compliance with NEN-3140 and adapted if necessary.

Standards and ISO standards (NEN-50293)
NEN-50293 describes the fixed fire extinguishing systems - Maintenance of automatic gas extinguishing systems.
NEN-50293 does not apply to the scope of the project - correctness of the requirement must be clarified.

Standards and ISO standards (NEN-50561)
NEN-50561 specifies EMC limits and measurements for communication devices for domestic use (low-voltage systems).

It will be checked whether NEN-50561 applies to the project. If so, our delivery products are checked for compliance with the standard and adapted if necessary.

Standards and ISO standards (RLN00003)
RLN00003 describes the environmental conditions for EV installations.
Our delivery products are tested for compliance with RLN00003 and adapted if necessary.

Standards and ISO standards (NEN-EN 1991-1-4)
NEN-EN 1991-1-4 describes the general action and wind load on structures.
Our delivery products are tested for compliance with NEN-EN 1991-1-4 and adapted if necessary.

Standards and ISO standards (NEN-3840)
NEN-3840 is the Rijkswaterstaat Safety Manual.
It will be checked whether NEN-3840 applies to the project. If so, our delivery products are checked for compliance with the standard and adapted if necessary.

Standards and ISO standards (IC 60068-2-27)
IC 60068-2-27 describes environmental conditions, classification and test methods.
IC 60068-2-27 is fulfilled.

Standards and ISO standards (NEN 50110)
NEN 50110 describes the general requirements for the operation of electrical installations.
NEN 50110 is fulfilled.

Standards and ISO standards (ISO-7010)
ISO-7010 describes, that every housing with an electrical installation shall be equipped with a hazard pictogram according to the ARBOWET (Dutch Working Conditions Act), with a minimum distance regarding observation of 5 metres.
Graphic symbols, safety colours and safety signs, as well as registered safety signs according to ISO 7010 are fulfilled.

Electromagnetic compatibility (EMC)

Standards and ISO standards (NEN-55024)
NEN-55024 describes the requirements and tests for the electromagnetic compatibility of devices.
NEN-55035 standard as the replacement is fulfilled.

Standards and ISO standards (EN61000-3-2)
EN61000-3-2 describes the limit values for harmonic currents in electromagnetic compatibility.
EN61000-3-2 is fulfilled.

Standards and ISO standards (EN61000-3-3)
EN61000-3-3 describes the limit values for voltage changes in electromagnetic compatibility.
EN61000-3-3 is fulfilled.

EN-ISO-14906

The Roadside Equipment must be able to have appropriate authentication codes ("Certificates/Keys") for Drilling Equipment from at least 30 Service Providers (EETS Providers and HDA), the storage of these authentication codes is in accordance with ISO-12813 (and ISO-14906).

EN-ISO-14906 is mentioned in Requirement REQ-1390 - Road Edge Devices: Information Security, Authentication Codes EETS Providers and HDA.
Our delivery products are tested for compliance with NEN-EN 1991-1-4 and adapted if necessary.

ISO/TS 19299:2020
ISO 19299:2020 defines an information security framework for all organizational and technical units of an EFC system and for the associated interfaces.
Our delivery products are tested for compliance with NEN-EN 1991-1-4 and adapted if necessary.

IEC 60068
IEC 60068 is an international standard for the environmental testing of electrotechnical products.
IEC 60068 is fulfilled. The test descriptions and tests are carried out on the basis of IEC 60068 and mapped in the RTM.

5. Annexes

REQ-ID (Annex 3.2)	Topic
REQ-895	Detailed System Design Moveable Observation Service - Content (FS-48)

Table 4 Requirements Annex 3.2

6. Technical drawing

The technical drawing can be found on the next page of this document and is additionally provided in a separate document, stored on DMS SharePoint, in the same folder as the system design of the Moveable Equipment.

Document Name: Layout_Movaeable_MDC10031763_17122024-1

Title:	Product Specification	Version	Confidentiality level
Reference:	37.3 - Specific detailed system design for Moveable Observation Service	1.1	Internal
Project Name:	NL RDW Observation		
Project Number	105798-DE		

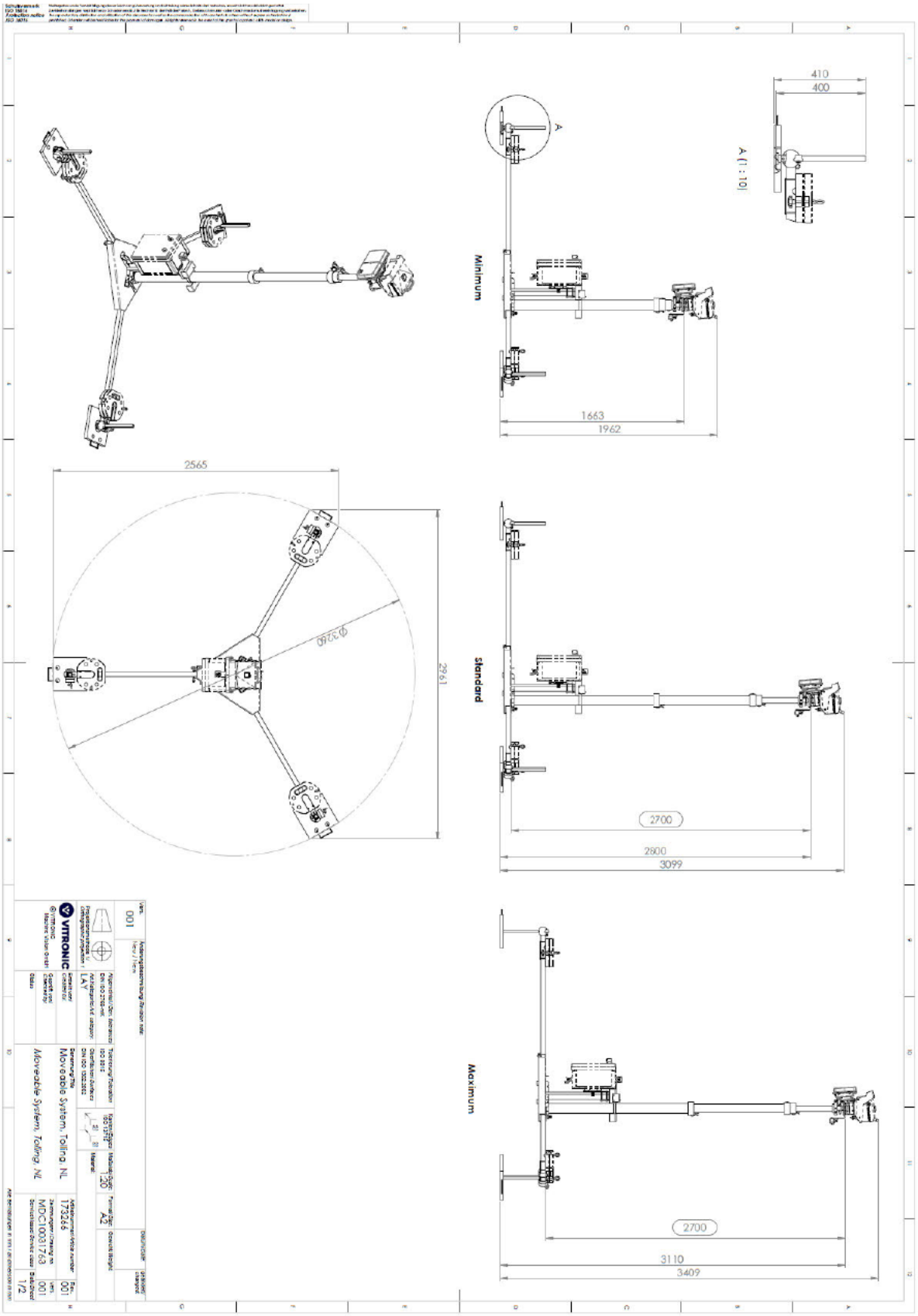

Title:	Product Specification	Version	Confidentiality level
Reference:	37.3 - Specific detailed system design for Moveable Observation Service	1.1	Internal
Project Name:	NL RDW Observation		
Project Number	105798-DE		

