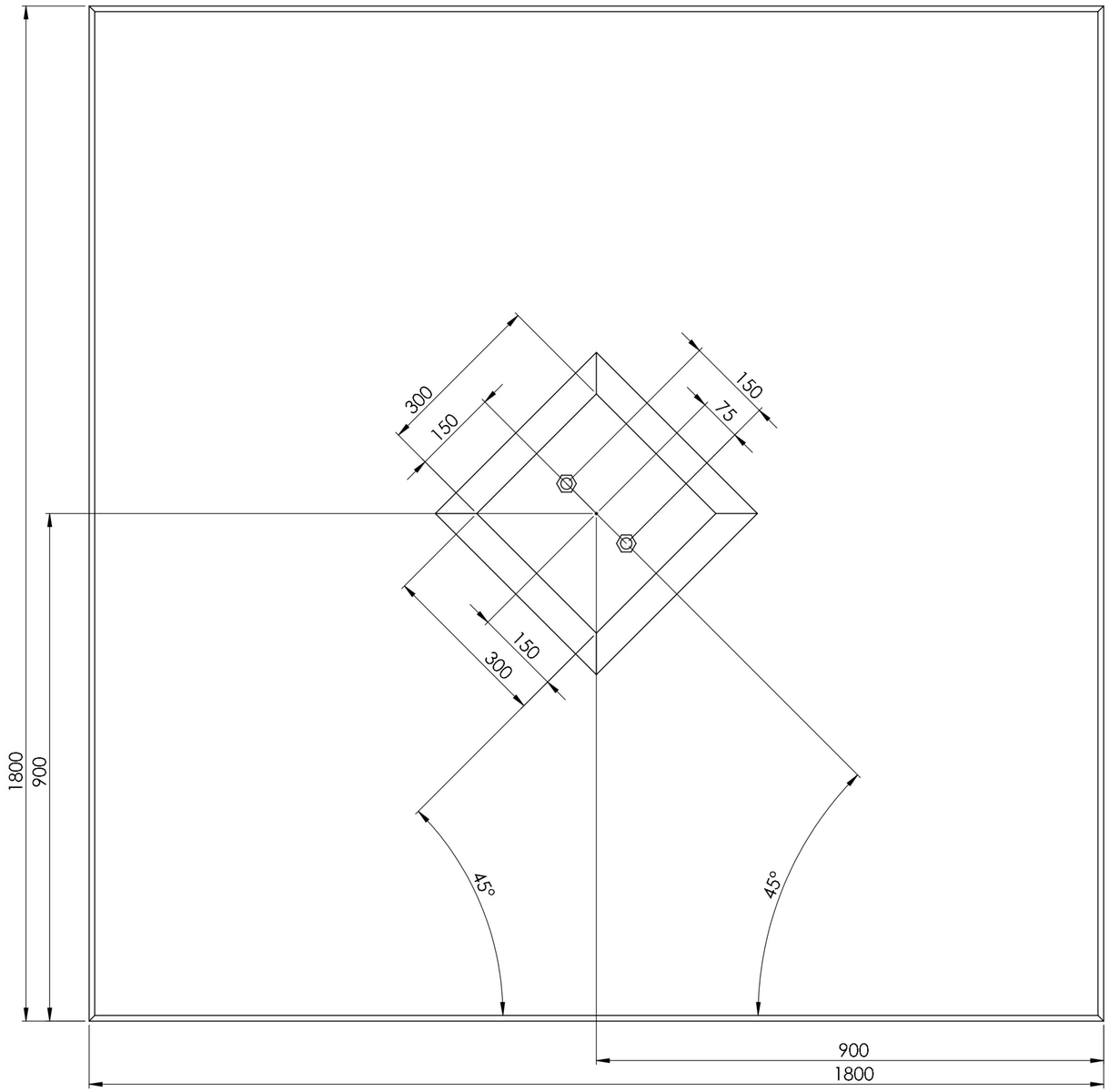

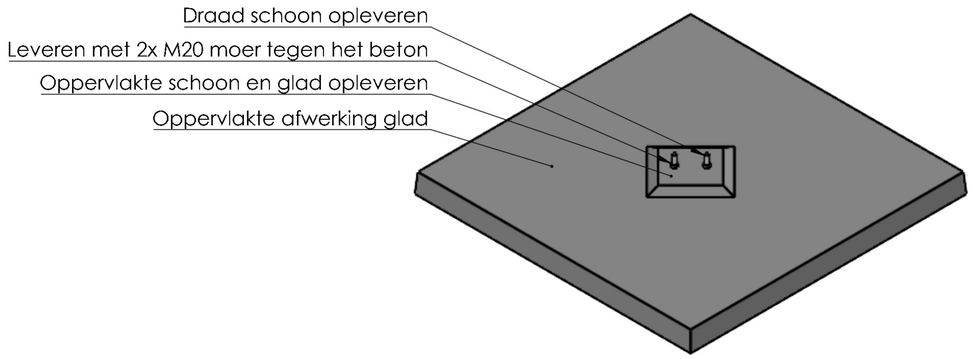

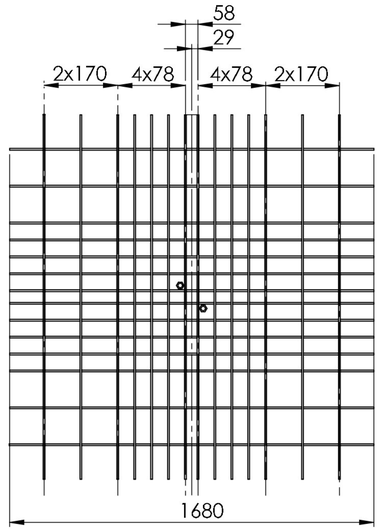

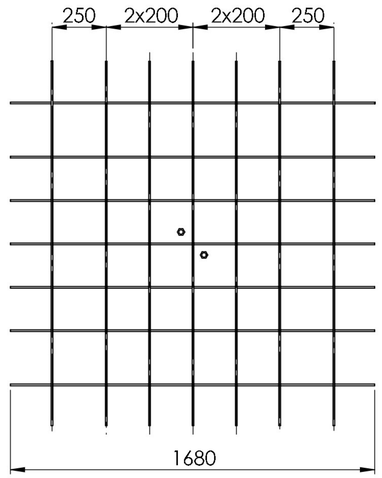

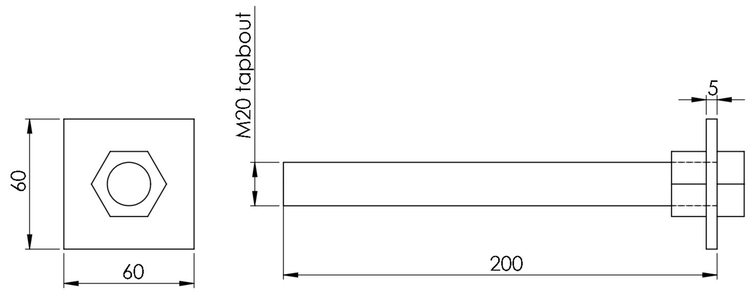

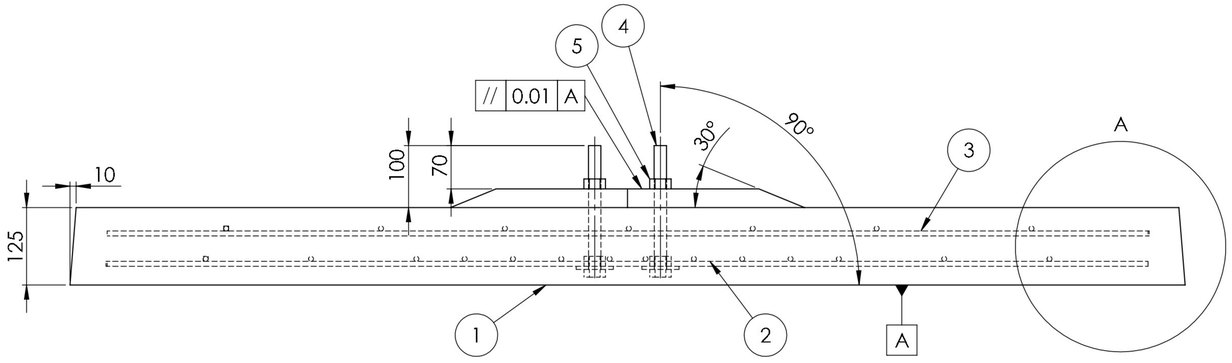

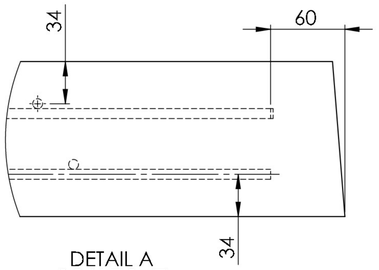

DETAIL A
SCALE 2 : 7

ITEM NO.	PART NUMBER	DESCRIPTION	QTY.
1	Funderingplaat 1.8x1.8x0.125	C50/60	1
2	Onderwapening 8mm	B500A, gelast	2
3	Bovenwapening 8mm	B500A, gelast	2
4	M20x200 Anker assembly	Din 933/I4017 8.8 THVZ ISO	2
5	M20 moer betonplaat	Din 934 |8| THVZ ISO	2

Third Angle projection

EAZ Wind
info@eazwind.com

[redacted]