RISE Research
Institutes
of Sweden AB
RISE Certifiering
Box 553
SE-371 23 Karlskrona
Sweden

Tel: +46 10 516 63 00
Web: www.ri.se/eta
Mail: certifiering@ri.se

Designated according to Article 29 of Regulation (EU) No 305/2011

Member of EOTA
www.eota.eu

# European Technical Assessment

# ETA 11/0429
of 17/09/2018

## General Part

| | |
|---|---|
| **Technical Assessment Body issuing the European Technical Assessment:** | RISE Research Institutes of Sweden AB |
| **Trade name of the construction product** | Hilti Firestop Coating CFS-CT |
| **Product family to which the construction product belongs** | Fire stopping and fire sealing product-Penetration seal "Hilti Firestop Double Board Seal"<br>for fire resistant walls and floors in buildings |
| **Manufacturer** | Hilti AG, Feldkircherstrasse 100, 9494 Schaan, Liechtenstein<br>www.hilti.com |
| **Manufacturing plant(s)** | Hilti production plant 4a<br>Hilti production plant 17 |
| **This European Technical Assessment contains** | 209 pages including 4 Annexes which form an integral part of this assessment. |
| **This European Technical Assessment is issued in accordance with regulation (EU) No 305/2011, on the basis of** | EAD 350454-00-1104, September 2017 - Fire stopping and fire sealing products – penetration seals |

Translations of this European Technical Assessment in other languages shall fully correspond to the original issued document and should be identified as such.

Communication of this European Technical Assessment, including transmission by electronic means, shall be in full. However, partial reproduction may be made with the written consent of the issuing Technical Assessment Body. Any partial reproduction has to be identified as such.

Gemeente Breda
Bijlage bij besluit
Z2020-000974 -V01
19-06-2020 *V en L*

## Content


1 Technical description of the product ..... 10
1.1 Definition of the construction product ..... 10
2 Specification of the intended use(s) in accordance with the applicable European Assessment Document (hereinafter EAD) ..... 10
2.1 Intended use ..... 10
2.2 Use category ..... 12
2.3 Working life ..... 12
3 Performance of the product and references to the methods used for its assessment ..... 12
3.1 Essential characteristics and their performance ..... 12
3.1.1 Mechanical resistance and stability (BWR 1) ..... 13
3.1.2 Safety in case of fire (BWR 2) ..... 13
*3.1.2.1 Reaction to fire ..... 13*
*3.1.2.2 Resistance to fire ..... 13*
3.1.3 Hygiene, health and environment (BWR 3) ..... 13
*3.1.3.1 Air permeability ..... 13*
*3.1.3.2 Water permeability ..... 13*
*3.1.3.3 Release of dangerous substances ..... 14*
3.1.4 Safety in use (BWR 4) ..... 14
*3.1.4.1 Mechanical resistance and stability ..... 14*
*3.1.4.2 Resistance to impact and movement ..... 14*
*3.1.4.3 Adhesion ..... 14*
*3.1.4.4 Durability – use category ..... 14*
*3.1.4.5 Durability - Flexibility Hilti Firestop Coating CFS-CT ..... 14*
*3.1.4.6 Durability - Compatibility of Hilti Firestop Coating CFS-CT with metals/plastics ..... 14*
3.1.5 Protection against noise (BWR 5) ..... 15
*3.1.5.1 Airborne sound insulation ..... 15*
3.1.6 Energy economy and heat retention (BWR 6) ..... 16
*3.1.6.1 Thermal properties ..... 16*
*3.1.6.2 Water vapor permeability ..... 16*
3.1.7 Sustainable use of natural resources (BWR 7) ..... 16
4 Assessment and verification of constancy of performance (hereinafter AVCP) system applied, with reference to its legal base ..... 16
5 Technical details necessary for the implementation of the AVCP system, as provided for in the applicable EAD ..... 17
1 ANNEX 1 Description of Product(s) and Product Literature ..... 18
1.1 Products ..... 18
1.1.1 Hilti Firestop Coating CFS-CT ..... 18
1.1.2 Hilti Firestop Board CFS-CT B 1S ..... 18
1.1.3 Hilti Firestop Board CFS-CT B 2S ..... 18
1.2 Ancillary Products ..... 19
1.2.1 Hilti Firestop Acrylic Sealant CFS-S ACR ..... 19
1.2.2 Hilti Firestop Collar CFS-C ..... 19
1.2.3 Hilti Firestop Collar CFS-C P ..... 19
1.2.4 Hilti Firestop Collar Endless CFS-C EL ..... 19

1.2.5 Hilti Firestop Bandage CFS-B ..... 19
1.2.6 Hilti Firestop Wrap CFS-W ..... 19
1.2.7 Hilti Firestop Wrap CFS-W P ..... 19
1.2.8 Hilti Firestop Sleeve CFS-SL M and Hilti Firestop Sleeve CFS-SL GA ..... 19
1.2.9 Fixing for Hilti Firestop Collars CFS-C and CFS-C P ..... 19
1.2.10 Fixing for Hilti Firestop Collar Endless CFS-C EL ..... 19
1.2.11 Mineral wool products for additional protection ..... 20
1.2.12 Pipe insulation products ..... 20
1.3 Technical product literature ..... 21
1.4 Installation ..... 22
1.4.1 Installation of the penetration seal "Hilti Firestop Double Board Seal", when using a MW board according to Table 1 and Hilti Firestop Coating CFS-CT ..... 22
1.4.2 Installation of the penetration seal "Hilti Firestop Double Board Seal", when using the pre-coated boards Hilti Firestop Board CFS-CT B 1S or CFS-CT B 2S ..... 23
1.4.3 Application temperature ..... 24
1.4.4 Re-penetration / removal of services ..... 24
1.5 Indications to the manufacturer ..... 24
1.5.1 Packaging, transport and storage ..... 24
1.5.2 Use, maintenance, repair ..... 24
2 ANNEX 2 RESISTANCE TO FIRE CLASSIFICATION OF PENETRATION SEALS HILTI FIRESTOP DOUBLE BOARD SEAL ..... 25
2.1 General Information Hilti Firestop Double Board Seal ..... 25
2.1.1 Intended use of penetrations and reference to relevant section ..... 26
2.1.2 Additional protection for cable/small conduit penetrations ..... 34
2.1.3 Additional components for composite and plastic pipe penetrations ..... 34
2.1.4 Additional components for metal pipe penetrations ..... 35
2.1.5 Additional components for cable penetrations ..... 35
2.1.6 Non-regulated PP-pipes ..... 36
2.2 Flexible walls according to 2.1 a) and rigid walls according to 2.1 b), minimum thickness 100 mm ..... 37
2.2.1 Blank seal (no services) * ..... 38
2.2.2 Cables ..... 39
2.2.3 Cables with Hilti Firestop Sleeve CFS-SL M and Hilti Firestop Sleeve CFS-SL GA 41
2.2.4 Small conduits and tubes ..... 41
*2.2.4.1 3 plastic conduits in 1 Hilti Firestop Collar CFS-C P – U/U ..... 42*
2.2.5 Metal pipes ..... 43
*2.2.5.1 Metal pipes with mineral wool insulation according to Table 3 ..... 43*
*2.2.5.1.1 Steel pipes with mineral wool insulation according to Table 3 ..... 44*
*2.2.5.1.2 Copper pipes with mineral wool insulation according to Table 3 ..... 47*
*2.2.5.2 Metal pipes with foamed elastomeric insulation according Table 4 and Hilti Firestop Bandage CFS-B ..... 49*
*2.2.5.2.1 Steel pipes with foamed elastomeric insulation according Table 4 and Hilti Firestop Bandage CFS-B 50*
*2.2.5.2.2 Stainless steel pipes with foamed elastomeric insulation according Table 4 and Hilti Firestop Bandage CFS-B ..... 51*
*2.2.5.2.3 Copper pipes with foamed elastomeric insulation according Table 4 and Hilti Firestop Bandage CFS-B ..... 51*

2.2.6 Plastic pipes with Hilti Firestop Collar CFS-C P ..... 53
*2.2.6.1 PVC-U pipes (C) according to EN ISO 1452-2, EN ISO 15493, DIN 8061/8062 – U/U ..... 53*
*2.2.6.2 PE pipes (C) according to EN 1519 - U/U ..... 54*
*2.2.6.3 PE pipes (C) according to EN ISO 15494, DIN 8074/8075 – U/U ..... 54*
*2.2.6.4 PE-S2 pipes "Geberit Silent-db20" ..... 55*
*2.2.6.4.1 PE-S2 pipes "Geberit Silent-db20"– U/U ..... 55*
*2.2.6.4.2 PE-S2 pipes "Geberit Silent-db20"– C/U ..... 55*
*2.2.6.5 PE-HD 100 RC pipes "Wavin TS"– U/U ..... 55*
*2.2.6.6 Non-regulated PP pipes with Hilti Firestop Collar CFS-C P ..... 56*
*2.2.6.6.1 PP pipes according EN 1451-1 – U/U ..... 56*
*2.2.6.6.2 PP pipes according EN 1451-1 – C/U ..... 56*
*2.2.6.6.3 PP pipes according EN 1451-1 – U/C ..... 56*
*2.2.6.7 PP pipes according to EN ISO 15874 and/or DIN 8077/8078 with Hilti Firestop Collar CFS-C P ..... 57*
*2.2.6.7.1 PP-H pipes "PROGEF standard pipe" – U/C ..... 57*
*2.2.6.7.2 PP-H pipes "PROGEF standard pipe" – U/U ..... 57*
*2.2.6.7.3 PP-R pipes according EN ISO 15874 – U/C ..... 57*
*2.2.6.7.4 PP-H 100 pipes "Dekaprop Industry pipes" – U/U ..... 57*
*2.2.6.8 ABS/PUR/PE-HD pipes "Coolfit"– U/C ..... 58*
*2.2.6.9 Special pipes with Hilti Firestop Collar CFS-C P ..... 59*
2.2.7 Plastic pipes with foamed elastomeric insulation according to Table 4 and Hilti Firestop Collar CFS-C P ..... 61
*2.2.7.1 PE pipes (C) according to EN 1519[18] (C) with continued insulation (D) – sustained – U/U ..... 61*
*2.2.7.2 Special plastic Pipes (C) with continued insulation (D) – sustained – U/C ..... 61*
*2.2.7.2.1 PE-X pipes according EN ISO 15875 ..... 61*
*2.2.7.2.2 PP pipes "Fusiotherm SDR 11" - U/C ..... 62*
*2.2.7.2.3 PP pipes "Fusiotherm Faser SDR 7.4/S3.2" - U/C ..... 62*
*2.2.7.2.4 PE-100RC pipes " Wavin TS" - U/C ..... 62*
*2.2.7.2.5 PVC-C pipes "Friatherm starr", ..... 63*
*2.2.7.3 PE pipes (C) according to EN 1519[18] (C) with continued insulation (D) – interrupted – U/U ..... 63*
*2.2.7.4 Pipes (C) with local insulation (D) – sustained – U/C ..... 63*
*2.2.7.4.1 PE-X pipes according EN ISO 15875 ..... 63*
*2.2.7.4.2 PP pipes "Fusiotherm SDR 11" ..... 64*
*2.2.7.4.3 PP pipes "Fusiotherm Faser SDR 7.4/S3.2" ..... 64*
*2.2.7.4.4 PE-100RC pipes "Wavin TS" ..... 64*
*2.2.7.4.5 PVC-C pipes "Friatherm starr" ..... 65*
2.2.8 Plastic pipes with Hilti Firestop Collar CFS-C ..... 65
*2.2.8.1 PVC-U pipes (C) according to EN ISO 1452-2, EN ISO 15493, DIN 8061/8062 ..... 65*
*2.2.8.2 PE pipes (C) according to EN ISO 15494, DIN 8074/8075 ..... 66*
*2.2.8.3 PE pipes (C) according to EN 1519[18] ..... 66*
2.2.9 Plastic pipes with Hilti Firestop Collar Endless CFS-C EL ..... 67
*2.2.9.1 Plastic pipes acc. EN 1519-1, EN 12666-1, EN 12201-2 and ABS-pipes acc. EN 1455-1 and SAN+PVC-pipes acc. EN 1565-1 ..... 68*

*2.2.9.2 ABS- pipes acc. EN 1455, EN 15493 and SAN+PVC-pipes acc. EN 1565-1, penetrating Hilti Firestop Boards CFS-CT B 1S* ..... *68*
*2.2.9.3 PE pipes acc. EN15494, EN12201-2 and DIN 8074/75* ..... *69*
*2.2.9.4 PVC pipes acc. EN 1452-1, EN 1329-1, EN 1453-1, EN 1566-1, EN ISO 15493 and DIN 8061/62* ..... *69*
*2.2.9.5 PP pipes, non-regulated* ..... *70*
*2.2.9.6 PP pipes acc. EN1451-1 and DIN 8077/78* ..... *71*
*2.2.9.7 PE pipes, non-regulated (Geberit Silent dB20)* ..... *71*
2.2.10 Plastic pipes with Hilti Firestop Wrap CFS-W ..... 72
*2.2.10.1 PVC-U pipes (C) according to EN ISO 1452-2, EN ISO 15493, DIN 8061/8062 – U/C* ..... *72*
*2.2.10.2 PE pipes (C) according to EN 151918 - U/C* ..... *72*
*2.2.10.3 PE pipes (C) according to EN ISO 15494, DIN 8074/8075 – U/C* ..... *73*
*2.2.10.4 PP pipes (C) "Wavin AS" or "Phonex AS" – C/U Manufacturer: Wavin Ltd. or KeKelit* ..... *73*
*2.2.10.5 PP pipes (C) "Raupiano plus" – C/U Manufacturer: Rehau* ..... *73*
*2.2.10.6 PE-S2 pipes (C) "Geberit Silent db20" Manufacturer: Geberit* ..... *74*
2.2.11 Al-Composite pipes with foamed elastomeric insulation according to Table 4 and Hilti Firestop Collar CFS-C P ..... 75
*2.2.11.1 Pipes (C) with continued insulation (D) – sustained – U/C* ..... *75*
2.2.12 Al-Composite pipes with foamed elastomeric insulation according Table 4 and Hilti Firestop Bandage CFS-B ..... 77
*2.2.12.1 Al-composite pipes (C) with continued insulation (D) – sustained – U/C* ..... *78*
*2.2.12.2 Al-composite pipes (C) with local insulation (D) – sustained – U/C* ..... *78*
2.2.13 Al-composite pipes with mineral wool insulation according to Table 3 ..... 79
*2.2.13.1 Pipes (C) with continued insulation (D) – sustained – U/C* ..... *79*
*2.2.13.2 Pipes (C) with local insulation (D) – sustained – U/C* ..... *80*
2.2.14 Plastic pipes with Hilti Firestop Wrap CFS-W P ..... 81
*2.2.14.1 Plastic pipes, sealed with Hilti Firestop Wrap CFS-W P – seal design variations in wall* ..... *82*
*2.2.14.2 Foamed elastomeric insulation* ..... *85*
*2.2.14.3 Pipes, sealed with Hilti Firestop Wrap CFS-W P – construction groups* ..... *86*
*2.2.14.4 Pipe support construction* ..... *87*
*2.2.14.5 Separation of penetrations* ..... *87*
*2.2.14.6 Plastic pipes sealed with Hilti Firestop Wrap CFS-W P penetrating a double board seal CFS-CT in wall* ..... *88*
*2.2.14.6.1 PE - pipes according to EN 1519-1, EN 12666-1, EN 12201-2 for EI 90-U/U* ..... *88*
*2.2.14.6.2 PE – pipes according to EN 1519-1, EN 12666-1, EN 12201-2 for EI 120-U/U* ..... *89*
*2.2.14.6.3 PE – pipes (isolated) acc.to EN 1519-1, EN 12666-1, EN 12201-2 for EI 90-U/U* ..... *90*
*2.2.14.6.4 PE – pipes (isolated) acc. to EN 1519-1, EN 12666-1, EN 12201-2 for EI 120-U/U* ..... *91*
*2.2.14.6.5 PE-pipes, Geberit Silent dB20 EI 90-U/U* ..... *92*
*2.2.14.6.6 PE-pipes, Geberit Silent dB20 EI 120-U/U* ..... *93*
*2.2.14.6.7 PE – pipes acc. EN 15494 EI 90-U/C* ..... *94*
*2.2.14.6.8 PE – pipes acc. EN 15494 EI 120-U/C* ..... *95*
*2.2.14.6.9 PP – pipes, non-regulated EI 90-U/U* ..... *96*
*2.2.14.6.10 PP – pipes, non-regulated EI 120-U/U* ..... *97*
*2.2.14.6.11 PVC-pipes according to EN 1452-1 - EI 90-U/U* ..... *98*

*2.2.14.6.12PVC-pipes according to EN 1452-1 - EI 120-U/U* ..... *99*
*2.2.14.6.13Geberit PushFit PB* ..... *100*
2.2.15 Aluminium composite pipes with elastomeric insulation, penetrating a CFS-CT double board seal, provided with Hilti firestop wrap CFS-W P and gap filler ..... 101
*2.2.15.1 Rehau Rautitan Stabil, penetrating CFS-CT, sealed with CFS-W P* ..... *101*
*2.2.15.2 Uponor MLC, penetrating CFS-CT, sealed with CFS-W P* ..... *102*
*2.2.15.3 Kekelit Kelox, penetrating CFS-CT, sealed with CFS-W P* ..... *103*
*2.2.15.4 Geberit Mepla, penetrating CFS-CT, sealed with CFS-W P* ..... *104*
*2.2.15.5 Viega Sanfix Fosta and Viega Raxofix, penetrating CFS-CT, sealed with CFS-W P* ..... *105*
*2.2.15.6 Geberit PushFit ML, penetrating CFS-CT, sealed with CFS-W P* ..... *107*
2.2.16 Metal pipes with elastomeric insulation, penetrating a CFS-CT double board seal, provided with Hilti firestop wrap CFS-W P and gap filler ..... 108
*2.2.16.1 Isolated copper pipes, penetrating CFS-CT, sealed with CFS-W P* ..... *108*
*2.2.16.2 Isolated steel pipes, penetrating CFS-CT, sealed with CFS-W P* ..... *110*
2.3 Flexible walls according to 2.1 a) and rigid walls according to 2.1 b), minimum thickness 135 mm ..... 113
2.3.1 Metal pipes ..... 113
*2.3.1.1 Metal pipes with mineral wool insulation according to Table 3* ..... *113*
*2.3.1.1.1 Steel pipes with mineral wool insulation according to Table 3* ..... *113*
*2.3.1.1.2 Copper pipes with mineral wool insulation according to Table 3* ..... *114*
2.3.2 Plastic pipes with Hilti Firestop Collar CFS-C ..... 115
*2.3.2.1 PVC-U pipes (C) according to EN ISO 1452-2, EN ISO 15493, DIN 8061/8062 – U/C* ..... *115*
*2.3.2.2 PE pipes (C) according to EN ISO 15494, DIN 8074/8075* ..... *115*
2.4 Rigid walls according to 2.1 c), minimum thickness 150 mm ..... 116
2.4.1 Cables ..... 117
2.4.2 Small conduits and tubes ..... 117
2.4.3 Metal pipes with mineral wool insulation according to Table 3 ..... 117
*2.4.3.1 Steel pipes with mineral wool insulation according to Table 3* ..... *117*
*2.4.3.2 Copper pipes with mineral wool insulation according to Table 3* ..... *118*
2.4.4 Plastic pipes with Hilti Firestop Collar CFS-C ..... 118
2.5 Rigid walls according to 2.2 d), minimum thickness 150 mm ..... 119
2.5.1 Cables ..... 120
2.5.2 Small conduits and tubes ..... 120
2.5.3 Metal pipes with foamed elastomeric insulation according Table 4 and Hilti Firestop Bandage CFS-B ..... 121
*2.5.3.1 Steel pipes with foamed elastomeric insulation according Table 4 and Hilti Firestop Bandage CFS-B* ..... *121*
*2.5.3.2 Stainless steel pipes with foamed elastomeric insulation according Table 4 and Hilti Firestop Bandage CFS-B* ..... *122*
*2.5.3.3 Copper pipes with foamed elastomeric insulation according Table 4 and Hilti Firestop Bandage CFS-B* ..... *123*
2.6 Rigid floors according to 1.2 e), minimum thickness 150 mm ..... 124
2.6.1 Blank seal (no services) * ..... 126
2.6.2 Cables ..... 127
2.6.3 Small conduits and tubes ..... 128
*2.6.3.1 3 plastic conduits in 1 Hilti Firestop Collar CFS-C P – U/C* ..... *129*

2.6.4 Metal pipes ..... 130
*2.6.4.1 Metal pipes with mineral wool insulation according to Table 3 ..... 130*
*2.6.4.1.1 Steel pipes with mineral wool insulation according to Table 3 ..... 131*
*2.6.4.1.2 Metal pipes with mineral wool insulation according to Table 3 ..... 134*
*2.6.4.2 Metal pipes with foamed elastomeric insulation according Table 4 and Hilti Firestop Bandage CFS-B, ..... 136*
*2.6.4.2.1 Steel pipes with foamed elastomeric insulation according Table 4 and Hilti Firestop Bandage CFS-B 136*
*2.6.4.2.2 Stainless steel pipes with foamed elastomeric insulation according Table 4 and Hilti Firestop Bandage CFS-B ..... 137*
*2.6.4.2.3 Copper pipes with foamed elastomeric insulation according Table 4 and Hilti Firestop Bandage CFS-B ..... 137*
*2.6.4.3 Metal pipes with foamed elastomeric insulation according Table 4 and Hilti Firestop Bandage CFS-B and additional protection ..... 138*
2.6.5 Plastic pipes with Hilti Firestop Collar CFS-C P ..... 139
*2.6.5.1 PVC-U pipes (C) according to EN ISO 1452-2, EN ISO 15493, DIN 8061/8062 with Hilti Firestop Collar CFS-C P ..... 140*
*2.6.5.2 PE pipes (C) according to EN ISO 15494, DIN 8074/8075 with Hilti Firestop Collar CFS-C P ..... 141*
*PE pipes (C) according to EN ISO 15494, DIN 8074/8075 – U/U ..... 141*
*2.6.5.3 PE pipes (C) according to EN 1519[18] with Hilti Firestop Collar CFS-C P ..... 142*
*2.6.5.4 PE-S2 pipes "Geberit Silent-db20" with Hilti Firestop Collar CFS-C P ..... 143*
*2.6.5.5 PE-HD 100 RC pipes "Wavin TS"– U/C with Hilti Firestop Collar CFS-C P ..... 144*
*2.6.5.6 Non-regulated PP pipes with Hilti Firestop Collar CFS-C P ..... 144*
*2.6.5.6.1 PP pipes , non regulated ..... 144*
*2.6.5.6.2 PP pipes "Raupiano Plus"– U/U ..... 145*
*2.6.5.6.3 PP pipes „Skolan-dB"– U/U ..... 145*
*2.6.5.6.4 PP pipes "Wavin AS" or "Phonex AS"– U/U ..... 145*
*2.6.5.6.5 PP pipes "Wavin SiTech"– U/U ..... 145*
*2.6.5.6.6 Non-regulated PP pipes – C/U ..... 146*
*2.6.5.7 PP pipes according to EN ISO 15874 and/or DIN 8077/8078 with Hilti Firestop Collar CFS-C P ..... 147*
*2.6.5.7.1 PP-H pipes "PROGEF standard pipe" according DIN 8077/8078 – U/U ..... 147*
*2.6.5.7.2 PP-H 100 pipes "Dekaprop Industry pipes" according DIN 8077/8078 – U/U ..... 147*
*2.6.5.7.3 PP-R pipes "Fusiotherm" according EN ISO 15874 – U/U ..... 147*
*2.6.5.8 PP pipes according to EN ISO 15874 and/or DIN 8077/8078 with Hilti Firestop Collar CFS-C P ..... 148*
*2.6.5.8.1 PP-H pipes "PROGEF standard pipe" according DIN 8077/8078 – U/C ..... 148*
*2.6.5.8.2 PP-R pipes "Fusiotherm" according EN ISO 15874 – U/C ..... 148*
*2.6.5.8.3 PP-R FS pipes "Firestop" according EN ISO 15874 and DIN 8077/8078– U/C ..... 148*
*2.6.5.9 ABS/PUR/PE-HD pipes "Coolfit"– U/C with Hilti Firestop Collar CFS-C P ..... 148*
*2.6.5.10 Special pipes with Hilti Firestop Collar CFS-C P ..... 149*
2.6.6 Plastic pipes with foamed elastomeric insulation according to Table 4 and Hilti Firestop Collar CFS-C P ..... 151
*2.6.6.1 Pipes (C) with continued insulation (D) – sustained – U/C ..... 152*
*2.6.6.1.1 PP pipes "Fusiotherm SDR 11" ..... 152*
*2.6.6.1.2 PP pipes "Fusiotherm Faser SDR 7.4/S3.2" ..... 153*

*2.6.6.1.3 PE-100RC pipes " Wavin TS"* ..... *153*
*2.6.6.1.4 PE-Xa pipes "Rautitan flex"* ..... *153*
*2.6.6.1.5 PP pipes "Climatherm Faserverbundrohr"* ..... *155*
*2.6.6.1.6 PP pipes "Firestop"* ..... *155*
*2.6.6.1.7 PVC-C pipes "Friatherm starr"* ..... *155*
*2.6.6.2 Pipes (C) with local insulation (D) – sustained – U/C* ..... *156*
*2.6.6.2.1 PP pipes "Fusiotherm SDR 11"* ..... *156*
*2.6.6.2.2 PP pipes "Fusiotherm Faser SDR 7.4/S3.2"* ..... *156*
*2.6.6.2.3 PE-100RC pipes "Wavin TS"* ..... *157*
*2.6.6.2.4 PE-Xa pipes "Rautitan flex"* ..... *157*
*2.6.6.2.5 PP pipes "Climatherm Faserverbundrohr"* ..... *158*
*2.6.6.2.6 PP pipes "Firestop"* ..... *158*
*2.6.6.2.7 PVC-C pipes "Friatherm starr"* ..... *158*
2.6.7 Plastic pipes with Hilti Firestop Collar CFS-C ..... 159
*2.6.7.1 PVC-U pipes (C) according to EN ISO 1452-2, EN ISO 15493, DIN 8061/8062 – U/C* ..... *159*
*2.6.7.2 PE pipes (C) according to EN ISO 15494, DIN 8074/8075* ..... *159*
*2.6.7.3 PE-100 pipes, EN 12666 , Geberit Silent dB20* ..... *159*
*2.6.7.4 PP-R pipes , „Aquatherm Green", acc. EN 15874 and DIN 8077/78, with additional protection AP9 see 2.6.5 and 2.6.6, offset = 80mm* ..... *160*
*2.6.7.5 PP-R pipes , „Aquatherm Blue", acc. EN 15874 and DIN 8077/78, with additional protection AP9 see 2.6.5 and 2.6.6, offset = 80mm* ..... *160*
*2.6.7.6 PVC-U pipes , Georg Fischer "Dekadur" acc. DIN 8061/62, with additional protection AP9 see 2.6.5 and 2.6.6, offset = 80mm* ..... *160*
2.6.8 Plastic pipes, sealed with Hilti Firestop Collar Endless CFS-C EL ..... 161
*2.6.8.1 PE pipes acc. EN 1519-1, EN12201-2 and EN 12666-1 and ABS-pipes acc. EN 1455-1 and SAN+PVC-pipes acc. EN 1565-1* ..... *162*
*2.6.8.2 ABS pipes acc. EN 1455-1, EN 15493 and SAN+PVC-pipes acc. EN 1565-1* ..... *162*
*2.6.8.3 PE pipes acc. EN 15494, EN12201-2 and DIN 8074/75* ..... *163*
*2.6.8.4 PVC pipes acc. EN 1452-1, EN1329-1, EN1453-1, EN 1566-1, EN ISO 15493 and DIN 8061/62* ..... *163*
*2.6.8.5 PP pipes, non-regulated* ..... *164*
*2.6.8.6 PP pipes acc. EN 1451-1 and DIN 8077/78* ..... *164*
*2.6.8.7 PE pipes, non-regulated (Geberit Silent dB20)* ..... *165*
*2.6.8.8 PVC-pipes, non-regulated (Friatec Friaphon)* ..... *165*
2.6.9 Plastic pipes with Hilti Firestop Wrap CFS-W ..... 166
*2.6.9.1 PVC-U pipes with Hilti Firestop Wrap CFS-W* ..... *166*
*2.6.9.2 PE pipes with Hilti Firestop Wrap CFS-W* ..... *168*
*2.6.8.2.1 PE pipes (C) according to EN 1519[18] - U/C Additional protection $AP_9$* ..... *168*
*2.6.8.2.2 PE pipes (C) according to EN ISO 15494, DIN 8074/8075 – U/U , Additional protection, $AP_9$ 168*
*2.6.8.2.3 PE-S2 pipes "Geberit Silent-db20"* ..... *169*
*2.6.9.3 PP pipes according EN 1451-1 with Hilti Firestop Wrap CFS-W – C/U* ..... *169*
*2.6.8.3.1 PP pipes "Wavin AS" or "Phonex AS"* ..... *169*
*2.6.8.3.2 PP/PP-MV/PP pipes "Polokal NG"* ..... *169*
*2.6.8.3.3 PP/Porolen/PP pipes "Polokal 3S"* ..... *169*
*2.6.8.3.4 PP-R pipes "Aquatherm Green pipe"* ..... *170*

2.6.10 Plastic pipes with Hilti Firestop Wrap CFS-W P in rigid floor ..... 171
*2.6.10.1 Pipes, sealed with Hilti Firestop Wrap CFS-W P – seal design variations in floor ..173*
*2.6.10.2 Pipe insulation .....176*
*2.6.10.3 Layer groups .....177*
*2.6.10.4 Separation of penetrations .....178*
*2.6.10.5 Plastic pipes sealed with Hilti Firestop Wrap CFS-W P penetrating a double board seal CFS-CT .....179*
*2.6.10.5.1 PE - pipes according to EN 1519-1, EN 12666-1, EN 12201-2 for EI 90-U/U .....179*
*2.6.10.5.2 PE - pipes according to EN 1519-1, EN 12666-1, EN 12201-2 for EI 120-U/U .....180*
*2.6.10.5.3 PE - pipes (isolated) according to EN 1519-1, EN 12666-1,EN 12201-2 for EI 90-U/U 181*
*2.6.10.5.4 PE – pipes (Geberit Silent dB20) for EI 90-U/U .....182*
*2.6.10.5.5 PE – pipes (Geberit Silent dB20) for EI 120-U/U .....183*
*2.6.10.5.6 PE – pipes according EN 15494 for EI 90-U/C .....184*
*2.6.10.5.7 PE pipes according EN 15494 for EI 120-U/C .....185*
*2.6.10.5.8 PP-pipes, non-regulated, for EI 90-U/U .....186*
*2.6.10.5.9 PP-pipes, non-regulated, for EI 120-U/U .....187*
*2.6.10.5.10PVC-pipes according EN 1452-1 for EI 90-U/U .....188*
*2.6.10.5.11PVC-pipes according EN 1452-1 for EI 120-U/C .....189*
2.6.11 Aluminium composite pipes with elastomeric insulation, penetrating CFS-CT double board seal, provided with Hilti firestop wrap CFS-W P and gap filler in floor ..... 191
*2.6.11.1 Rehau Rautitan Stabil, penetrating CFS-CT, sealed with CFS-W P .....191*
*2.6.11.2 Uponor MLC, penetrating CFS-CT, sealed with CFS-W P .....192*
*2.6.11.3 Kekelit Kelox, penetrating CFS-CT, sealed with CFS-W P .....193*
*2.6.11.4 Geberit Mepla, penetrating CFS-CT, sealed with CFS-W P .....194*
*2.6.11.5 Viega Sanfix Fosta and Viega Raxofix, penetrating CFS-CT, sealed with CFS-W P .....195*
*2.6.11.6 Geberit PushFit ML, penetrating CFS-CT, sealed with CFS-W P .....197*
2.6.12 Metal pipes with elastomeric insulation, penetrating a CFS-CT double board seal, provided with Hilti firestop wrap CFS-W P and gap filler ..... 198
*2.6.12.1 Isolated copper pipes, penetrating CFS-CT, sealed with CFS-W P .....198*
*2.6.12.2 Isolated steel pipes, penetrating CFS-CT, sealed with CFS-W P .....199*
2.6.13 Al-Composite pipes with foamed elastomeric insulation according to Table 4 and Hilti Firestop Collar CFS-C P ..... 201
*2.6.13.1 Pipes (C) with local insulation (D) – sustained – U/C .....201*
*2.6.13.2 Pipes (C) with continued insulation (D) – sustained – U/C .....202*
2.6.14 Al-composite pipes and plastic pipes with mineral wool insulation according to Table 3 203
*2.6.14.1 Aluminum composit pipes (C) with continued insulation (D) – sustained – U/C .....203*
*2.6.10.2 PE pipes (C) with continued insulation (D) – sustained – U/C .....204*
2.7 Rigid walls according to 2.1 f) minimum thickness 250 mm ..... 205
2.7.1 Blank seal (no services) * ..... 206
3 ANNEX 3 Reference Documents ..... 207
3.1 References to standards mentioned in the ETA: ..... 207
3.2 Other referenced documents ..... 208
4 ANNEX 4 Abbreviations used in drawings ..... 209

Specific parts

# 1 Technical description of the product

## 1.1 Definition of the construction product

This European Technical Assessment refers to a Firestop coating for use in penetration seals with the designation "Hilti Firestop Coating CFS-CT". Hilti Firestop Coating CFS-CT may be either applied on site onto a MW board as specified in Table 1 or used in the form of the Hilti Firestop Board CFS-CT B (pre-coated with Hilti Firestop Coating CFS-CT).

Hilti Firestop Coating CFS-CT is a white, ablative 1-component product and is composed essentially of filling substances and an acrylic binder.

Hilti Firestop Coating CFS-CT is supplied in pails/buckets of different size. The coating is sprayed or painted on mineral wool boards and partially on the services (for detail see Annex 2). For the installation procedure see Annex 3.1.

Hilti Firestop Board CFS-CT B is a mineral wool board pre-coated with Hilti Firestop Coating CFS-CT. The board is supplied in of the dimensions 1000 x 600 x 50 mm. The thickness of the coating is 0.7 mm. For the installation procedure see Annex 3.2.

Ancillary products referred to in this European Technical Assessment within the framework of evaluating resistance to fire (see Annexes 1 and 2) are not covered by this ETA and cannot be CE-marked on the basis of it.

# 2 Specification of the intended use(s) in accordance with the applicable European Assessment Document (hereinafter EAD)

## 2.1 Intended use

Hilti Firestop Coating CFS-CT is intended to form part of a penetration seal ("Hilti Firestop Double Board Seal"), which is used to maintain the fire resistance of a separating element (wall or floor) when and where services pass through.

The "Hilti Firestop Double Board Seal" is made of two adjacent mineral wool (MW) boards, the Hilti Firestop Coating CFS-CT, the Hilti Firestop Acrylic Sealant CFS-S ACR (to close any gaps between the opening edges and the seal or between services and the seal) and other components as listed in Annex 1 depending on the type of services included.

The seal may be either formed by applying Hilti Firestop Coating CFS-CT on site onto a MW board as specified in Table 1 or by using the pre-coated MW board Hilti Firestop Board CFS-CT B 1S (coated on one face with Hilti Firestop Coating CFS-CT) or Hilti Firestop Board CFS-CT B 2S (coated on both faces with Hilti Firestop Coating CFS-CT). Wherever this document references Hilti Firestop Board CFS-CT B 1S, the Hilti Firestop Board CFS-CT B 2S, which is the pre-coated board for single board seals (for further details see ETA-11/0428) may also be used.

The separating elements must be classified in accordance with EN 13501-2 for the required fire resistance period or fulfil the requirements of the relevant Eurocode. This ETA does not cover use of this product as a penetration seal in sandwich panel constructions.

Hilti Firestop Double Board Seal may be used to provide a penetration seal with the following specific services, single, multiple or mixed:

| | |
|---|---|
| Blank seal | No services, as given in Annex 2 |
| Cables | Services as given in Annex 2 |
| Metal pipes | Services as given in Annex 2 |
| Plastic pipes | Services as given in Annex 2 |
| Composite pipes | Services as given in Annex 2 |
| Mixed (combination) | Services as given in Annex 2 |

For the maximum seal size see Annex 2.

Penetration seals require a minimum separation of 200 mm. For minimum distances between services within a penetration seal (multiple or mixed penetration seal) see Annex 2.

Maximum distance [mm] from surface of the building element for first support / fixing of services: see Annex 2.

Annex 2 gives details of penetration seals for which fire resistance tests were carried out. This ETA covers assemblies installed in accordance with the provisions given in 4.3 and Annex 3.

Although a penetration seal is intended for indoor applications only, the construction process may result in it being subjected to more exposed conditions for a period before the building envelope is closed. For this case provisions shall be made to protect temporarily exposed penetration seals according to the instructions of the manufacturer.

The specific elements of construction that Hilti Firestop Coating CFS-CT may be used to provide a penetration seal in, are as follows:

a) Flexible walls: The wall must have a minimum thickness of 100, 112 or 135 mm, respectively (for detail see Annex 2) and comprises timber or steel studs lined on both faces with one or several layers of boards of minimum 25 mm overall thickness on both sides of the wall. For timber stud walls there must be a minimum distance of 100 mm from the seal to any stud and the cavity between stud and seal must be filled with minimum 100 mm insulation of Class A1 or A2 (in accordance with EN 13501-1) in the cavity between stud and seal. An aperture framing must be installed made of C-studs and boards that have been used for the lining of the wall, minimum thickness of the board 12.5 mm.

b) Rigid walls: The wall must have a minimum thickness of 100 or 135 mm, respectively (for detail see Annex 2) and comprise concrete, blockwork or masonry, with a minimum density of 650 kg/m$^3$.

c) Rigid walls: The wall must have a minimum thickness of 150 mm and comprise concrete, blockwork or masonry, with a minimum density of 600 kg/m$^3$.

d) Rigid walls: The wall must have a minimum thickness of 150 mm and comprise concrete, blockwork or masonry, with a minimum density of 760 kg/m$^3$.

e) Rigid floors: The floor must have a minimum thickness of 150 mm and comprise aerated concrete or concrete with a minimum density of 670 kg/m$^3$.

f) Rigid walls: The wall must have a minimum thickness of 250 mm and comprise concrete, blockwork or masonry, with a minimum density of 500 kg/m$^3$.

g) Rigid floors: The floor must have a minimum thickness of 150 mm and comprise aerated concrete or concrete with a minimum density of 550 kg/m$^3$.

## 2.2 Use category

Hilti Firestop Coating CFS-CT fulfils the requirements of use condition Y2 in accordance with EAD 350454-00-1104, September 2017, Section 1.2.1 (intended for use at temperatures between -20 °C and + 70°C, but with no exposure to rain nor UV).

## 2.3 Working life

The assessment methods included or refered to in this EAD have been written based on the manufacturer's request to take into acount a working life of the product for the intended use of 10 years when installed in the works provided that the product is subject to appropriate installation, use and maintenance. These provisions are based upon the current state of the art and the available knowledge and experience.

The indication given as to the workinglife of the construction product cannot be interpreted as a guarantee neither given by the product manufacturer or his representative nor by EOTA when issuing the EAD nor by the Technical Assessment Body (RISE Research Institutes of Sweden AB), but are regarded only as s means for expressing the expected economically reasonable working life of the product.

# 3 Performance of the product and references to the methods used for its assessment

## 3.1 Essential characteristics and their performance

| **Basic requirement for construction work** | **Essential characteristics** | **Performance** |
|---|---|---|
| BWR 1 - Mechanical resistance and stability | None | Clause 3.1.1 |
| BWR 2 - Safety in case of fire | Reaction to fire | Clause 3.1.2.1 |
| | Resistance to fire | Clause 3.1.2.2 and Annex 2 |
| BWR 3 - Hygiene, health and the environment | Air permeability (material property) | Clause 3.1.3.1 |
| | Water permeability (material property) | Clause 3.1.3.2 |
| | Content and/or release of dangerous substances | Clause 3.1.3.3 |
| BWR 4 - Safety in use | Mechanical resistance and stability | Clause 3.1.4.1 |
| | Resistance to impact / movement | Clause 3.1.4.2 |
| | Adhesion | Clause 3.1.4.3 |
| | Durability - use category | Clause 3.1.4.4 |
| | Durability -flexibility | Clause 3.1.4.5 |
| | Durability - Compatibility | Clause 3.1.4.6 |
| BWR 5 - Protection against noise | Airborne sound insulation | Clause 3.1.5.1 |
| BWR 6 - Energy economy and heat retention | Thermal properties | Clause 3.1.6.1 |
| | Water vapor permeability | Clause 3.1.6.2 |
| BWR 7- Sustainable use of natural resources | None | Clause 3.1.7 |

### 3.1.1 Mechanical resistance and stability (BWR 1)

Not relevant, no performance assessed (NPA).

### 3.1.2 Safety in case of fire (BWR 2)

#### 3.1.2.1 Reaction to fire

Hilti Firestop Coating CFS-CT on a MW board fulfils the requirements for reaction to fire class D- s2, d0 according to EN 13501-1. The reaction to fire classification of the mineral wool board used for Hilti Firestop Board CFS-CT B 1S and CFS-CT B 2S is class A1.

#### 3.1.2.2 Resistance to fire

The resistance to fire performance according to EN 13501-2 of penetration seals "Hilti Firestop Double Board Seal" incorporating Hilti Firestop Coating CFS-CT with a mineral wool board according to Table 1 or Hilti Firestop Coated Board CFS-CT B is given in Annex 2.

Information on ancillary products which were tested within the framework of this European Technical Assessment for evaluating resistance to fire are given in Annex 1.

Any changes in the material, the composition, the dimensions or the properties of the ancillary products shall be notified to SP Certification without delay, which will decide whether a new assessment will be necessary.

### 3.1.3 Hygiene, health and environment (BWR 3)

#### 3.1.3.1 Air permeability

The gas permeability regarding the gases air, nitrogen ($N_2$), carbon dioxide ($CO_2$) and $CH_4$ (methane) has been tested according to the principles of EN 1026 for a coating thickness of 1 mm ($CO_2$ and $CH_4$) and 2 mm ($N_2$). The following flow rates per area (q/A) have been achieved for the given air pressure differences (Δp). The flow rate index indicates the type of gas: *Gas permeability of Hilti Firestop Coating CFS-CT*

| Δp [Pa] | q/A $N_2$ [$m^3/(h \cdot m^2)$] | q/A $CO_2$ [$m^3/(h*m^2)$] | q/A $CH_4$ [$m^3/(h*m^2)$] |
|---|---|---|---|
| 50 | ≤ 0.032 | ≤ 0.060 | ≤ 0.065 |
| 250 | ≤ 0.159 | ≤ 0.299 | ≤ 0.327 |

The declared values refer to a body of pure Hilti Firestop Coating CFS-CT on mineral wool board without any penetrating installation.

#### 3.1.3.2 Water permeability

The water permeability has been tested according to Annex C of EAD 350454-00-1104, September 2017, Annex C. The specimen consisted of 0.7 mm Hilti Firestop Coating CFS-CT (dry film thickness) on mineral wool.

Test result: Water tight to 1000 mm head of water or water tight to 9806 Pa.

#### 3.1.3.3 Release of dangerous substances

The release of semi-volatile organic compounds (SVOC) and volatile organic compounds (VOC) has been determined according to EAD 350454-00-1104 clause 2.2.5.1 and prEN 16516:2015. The loading factor used for emission testing was 0,05m²/m³.

The total emission of SVOC of “Hilti Firestop Product” after 3 days is less than 0,005 mg/m³.

The total emission of SVOC of “Hilti Firestop Product” after 28 days is 0,005 mg/m³.

The total emission of VOC of “Hilti Firestop Product” after 3 days is 820 mg/m³.

The total emission of VOC of “Hilti Firestop Product” after 28 days is 290 mg/m³.

### 3.1.4 Safety in use (BWR 4)

#### 3.1.4.1 Mechanical resistance and stability

In impact tests according to EOTA TR001 the requirements for the highest risk zone type (Type IV) have been fulfilled as defined for internal walls in EOTA TR 001 A.1 for safety in use (500 Nm soft body impact, 10 Nm hard body impact) as well as serviceability (120 Nm soft body impact, 6 Nm hard body impact). The maximum dimension of the penetration seal is 1.0 x 1.5 m. The results are therefore valid for all seal sizes given in Annex 2.

In case of horizontal penetration seals precautions have to be taken to prevent a person stepping onto the penetration seal from falling through the seal.

#### 3.1.4.2 Resistance to impact and movement

See clause 3.1.4.1

#### 3.1.4.3 Adhesion

See clause 3.1.4.1

#### 3.1.4.4 Durability – use category

Hilti Firestop Coating CFS-CT fulfils the requirements of use category $Y_2$ in accordance with EAD 350454-00-1104, September 2017, Section 2.2.9.

Since the requirements for type $Y_2$ are met, also the requirements for type $Z_1$ and $Z_2$ are fulfilled.

Type $Y_2$: Products intended for use at temperatures between -20 °C and + 70°C, but with no exposure to rain nor UV.

Type $Z_1$: Products intended for use at internal conditions with high humidity, excluding temperatures below 0°C.

Type $Z_2$: Products intended for uses at internal conditions with humidity classes other than Z1, excluding temperatures below 0°C.

#### 3.1.4.5 Durability - Flexibility Hilti Firestop Coating CFS-CT

The flexibility of Hilti Firestop Coating CFS-CT has been tested in accordance with EN ISO 1519 with the result of no crack formation on a mandrel of 2 mm diameter for a coating thickness of 1.0 mm.

#### 3.1.4.6 Durability - Compatibility of Hilti Firestop Coating CFS-CT with metals/plastics

Hilti Firestop Coating CFS-CT has been tested in accordance with EOTA Technical Report TR024, 4.3.6 for compatibility in permanent contact with metals and plastics with the result of no interaction with copper, galvanized steel and stainless steel as well as PE, PVC and ABS.

### 3.1.5 Protection against noise (BWR 5)

#### 3.1.5.1 Airborne sound insulation

Test reports for noise reduction according to EN ISO 140-3, EN ISO 140-10 indentical to EN ISO 10140 part 1, 2, 4 and 5 have been provided. The test results is expressed in accordance with EN ISO 717-1.

The acoustic tests were performed in a flexible wall and in a rigid wall. The acoustic characteristics of the walls itself have not been measured.

According to these tests reports the single number ratings are:

Flexible wall:

| | CFS- CT B 1S 2x50 mm | CFS-CT on MW board 2x50 mm | CFS- CT on MW board2x50 mm |
|---|---|---|---|
| Nominal density of board [kg/m$^3$] | 140 | 150 | 160 |
| No. of board faces coated | 1 | 2 | 1 |
| Air gap between boards [mm] | 55 | 0 | 55 |
| Specimen size [mm x mm] | 400 x 500 | 600 x 500 | 400 x 500 |
| $D_{n,e,w}$ (C; $C_{tr}$) [dB] | 58 (-4;-8) | 52 (-3;-7) | 60 (-4;-9) |
| $R_w$ (C; $C_{tr}$) [dB] | 51 (-4;-8) | 45 (-3;-7 | 53 (-4;-9) |

Test setup: Structure of the flexible wall: 2 x 12.5 mm plasterboard on both sides of a 50 mm metal stud frame. The void was filled with a 40 mm mineral wool slab. Several variations have been tested: the pre-coated board CFS-CT B 1S as well as other mineral wool boards coated with CFS-CT, single and double layer seals, the latter with and without air gap between the boards. The coating thickness was 1 mm for boards coated on both sides and 0.7 mm for boards coated on 1 side only. The joints around the board have been sealed with Hilti Firestop Acrylic Sealant CFS-S ACR.

Rigid wall:

| | CFS-CT on MW board 2x50 mm | CFS-CT on MW board 2x60 mm |
|---|---|---|
| Nominal density of board [kg/m$^3$] | 150 | 150 |
| No. of board faces coated | 2 | 2 |
| Air gap between boards [mm] | 30 | 0 |
| Specimen size [mm x mm] | 620 x 520 | 620 x 520 |
| $D_{n,e,w}$ (C; $C_{tr}$) [dB] | 42 (-3;-5) | 44 (-4;-7) |
| $R_w$ (C; $C_{tr}$) [dB] | 35 (-3;-5) | 37 (-4;-7) |

Test setup: Structure of the rigid wall: 175 mm thick concrete wall with a density of 2000 kg/m³ which was plastered on both sides. The opening was reduced to the test specimen size by means of block work of 175 mm thickness, plastered on both sides and a pre-fabricated concrete frame. Single and double layer seals have been tested, the latter with a variation in board thickness and different air gap between the boards. The coating thickness was 1 mm. The joints around the board have been sealed with Hilti Firestop Acrylic Sealant CFS-S ACR.

It should be noticed that both above mentioned results apply to the total wall construction of the size 1.25 m x 1.50 m (= 1.88 m²), i.e. the given wall with 0.322 m² Hilti Firestop Double Board Seal in case of rigid walls and a size of 1.38 x 1.5 m (= 2.07 m²), i.e. the given wall with 0.30 m² and 0.20 m² respectively Hilti Firestop Double Board Seal in case of flexible walls.

$D_{n,e,w}$: weighted element-normalized level difference of small building elements (given with spectrum adaptation terms C and $C_{tr}$)

$R_w$: weighted sound reduction index (given with spectrum adaptation terms C and $C_{tr}$)

### 3.1.6 Energy economy and heat retention (BWR 6)

#### 3.1.6.1 Thermal properties

Hilti Firestop Coating CFS-CT

The insulation performance of a mineral wool slab is slightly reduced by the coating, 2.2% with one-sided coating, 3.0 to 3.4% with double-sided coating. This has to be considered when selecting a mineral wool board if a required regulatory nominal $\lambda$-value has to be achieved.

Hilti Firestop Board CFS-CT B 1S

Thermal conductivity coefficient according to EN 12667 for a double layer of the boards:
$\lambda_{10}$ = 0.039 W/mK.

#### 3.1.6.2 Water vapor permeability

Performance not assessed (NPA).

### 3.1.7 Sustainable use of natural resources (BWR 7)

Not relevant, no performance assessed (NPA).

# 4 Assessment and verification of constancy of performance (hereinafter AVCP) system applied, with reference to its legal base

According to the decision 1999/454/EC of the - Commission decision of 22 June 1999 (OJ L 178/52 of 14/07/99, p. 3), as amended by Decision of the Commission 2001/596/EC of 8 January 2001 (OJ L 209/33 of 2/8/2001, p.2) the system of assessment and verification of constancy of performance (see Annex V to the regulation (EU) No 305/2011and EC delegated act no 568/2014 of 18 February 2014 ) given in the following table apply:

| Product(s) | Intended use(s) | Level(s) or class(es) | System(s) |
|---|---|---|---|
| Fire stopping and fire sealing products | For fire compartmentation and/or fire protection or fire performance | Any | 1 |
| Fire stopping and fire sealing products | For uses subject to reaction to fire regulations | A, D, E, F | 4 |

# 5 Technical details necessary for the implementation of the AVCP system, as provided for in the applicable EAD

Technical details necessary for the implementation of the AVCP system are laid down in the control plan deposited at RISE.

Issued in Borås on 09.17.2018
By RISE Research Institutes of Sweden AB

[redacted]

# 1 ANNEX 1 Description of Product(s) and Product Literature

## 1.1 Products

### 1.1.1 Hilti Firestop Coating CFS-CT

A detailed specification of the product is contained in document “Identification / Product Specification relating to the European Technical Assessment ETA-11/0428 and ETA-11/0429 - Hilti Firestop Coating CFS-CT” which is a non-public part of this ETA.

The Control Plan is defined in document "Control Plan” relating to the European Technical Assessment ETA-11/0428 and ETA-11/0429 - Hilti Firestop Coating CFS-CT” which is a non-public part of this ETA.

### 1.1.2 Hilti Firestop Board CFS-CT B 1S

Hilti Firestop Board CFS-CT B 1S is a mineral wool board pre-coated on one face with Hilti Firestop Coating CFS-CT. The thickness of the coating is 0.7 mm.

A detailed specification of the product is contained in document “Identification / Product Specification relating to the European Technical Assessment ETA-11/0428 and ETA 0429 - Hilti Firestop Board CFS-CT B 1S” which is a non-public part of this ETA.

The "Control Plan" is defined in document "Control Plan” relating to the European Technical Assessment ETA-11/0428 and ETA-10/0429 - Hilti Firestop Board CFS-CT B 1S” which is a non-public part of this ETA.

### 1.1.3 Hilti Firestop Board CFS-CT B 2S

Hilti Firestop Board CFS-CT B 2S is a mineral wool board pre-coated on both faces with Hilti Firestop Coating CFS-CT. The thickness of the coating is 0.7 mm.

A detailed specification of the product is contained in document “Identification / Product Specification relating to the European Technical Assessment ETA-11/0428 and ETA-11/0429 - Hilti Firestop Board CFS-CT B 2S” which is a non-public part of this ETA.

The "Control Plan" is defined in document "Control Plan relating to the European Technical Assessment ETA-11/0428 and ETA-10/0429 - Hilti Firestop Board CFS-CT B 2S” which is a non-public part of this ETA.

**Table 1: Specification for mineral wool boards suitable for being used together with Hilti Firestop Coating CFS-CT**

| Manufacturer | Product designation |
|---|---|
| Flumroc | Flumroc 341 |
| Isover | Fireprotect 150 |
| Isover | Orsil Pyro |
| Isover | Orsil S |
| Isover | Orsil T |
| Isover | Protect BSP 150 |
| Isover | Stropoterm |
| Knauf | HERALAN BS-15 |
| Knauf | HERALAN DDP-S |
| Knauf | HERALAN DP-15 |
| Paroc | FPS 14 |

**Table 1 (cont.): Specification for mineral wool boards suitable for being used together with Hilti Firestop Coating CFS-CT**

| Manufacturer | Product designation |
|---|---|
| Paroc | FPS 17 |
| Paroc | Pyrotech Slab 140 |
| Paroc | Pyrotech Slab 160 |
| Rockwool | Hardrock II, Hardrock 040 |
| Rockwool | RP-XV |
| Rockwool | RPB-15, ProRox SL 980 |

## 1.2 Ancillary Products

### 1.2.1 Hilti Firestop Acrylic Sealant CFS-S ACR

For specification and further details see ETA-10/0292

### 1.2.2 Hilti Firestop Collar CFS-C

For specification and further details see ETA-10/0403

### 1.2.3 Hilti Firestop Collar CFS-C P

For specification and further details see ETA-10/0404

### 1.2.4 Hilti Firestop Collar Endless CFS-C EL

For specification and further details see ETA-14/0085

### 1.2.5 Hilti Firestop Bandage CFS-B

For specification and further details see ETA-10/0212

### 1.2.6 Hilti Firestop Wrap CFS-W

For specification and further details see ETA-10/0405

### 1.2.7 Hilti Firestop Wrap CFS-W P

For specification and further details see test report No 17507A from Warringtonfiregent.

### 1.2.8 Hilti Firestop Sleeve CFS-SL M and Hilti Firestop Sleeve CFS-SL GA

For specification and further details see ETA-11/0153 and ETA-17/0081

### 1.2.9 Fixing for Hilti Firestop Collars CFS-C and CFS-C P

- Threaded rods M8, galvanized, minimum strength category 4.6
- Nuts M8, galvanized (e.g. according to EN ISO 4032)
- Washers:
  - at a collar hook: A 8.4-28 s = 2 mm, galvanized (e.g. according to EN ISO 7089)
  - at the top side of a floor seal: A 8.4-40 s = 3 mm, galvanized (e.g. according to EN ISO 7089)

### 1.2.10 Fixing for Hilti Firestop Collar Endless CFS-C EL

Hilti Firestop Collar Endless CFS-C EL ($AR_1R$) to be installed against the wall or floor utilising the specified number of fixing hooks. The required number and type of hooks (short hooks only) is shown below:

| | **Numbers of short hooks** | | |
|---|---|---|---|
| **Nominal pipe Outside diameter $dR_c$ (mm)** | **Max. insulation thickness** (Insulation is an acoustical insulation) | | |
| | 0 mm | 4 mm | 9 mm |
| 16 | --- | --- | 2 |
| 32 | 2 | 2 | 2 |
| 40 | 2 | 2 | 2 |
| 50 | 2 | 2 | 2 |
| 56 | 3 | 3 | 3 |
| 63 | 3 | 3 | 3 |
| 75 | 3 | 3 | 3 |
| 90 | 3 | 3 | 3 |
| 110 | 3 | 3 | 3 |

Hooks for CFS-C EL to seal plastic pipes penetrating coated boards CFS-CT B 1S

in flexible or rigid walls:

- have to be fixed by using a threaded rod minimum M6 with flat washer and nut on both sides of the wall.

### 1.2.11 Mineral wool products for additional protection

**Table 2: Specification for mineral wool products suitable for being used as additional protection for cables/cable supports and metal pipes according to 1.2 (relevant for Annex 2.6.4.1)**

| **Characteristic** | **Specification** | **Unit** |
|---|---|---|
| Stone wool according to EN 14303 | | |
| Reaction to fire class according to EN 13501-1 | A1 or A2 | - |
| Thermal conductivity at 20°C | ≤ 0.040 | W/(mK) |
| Density | 35 - 45 | $kg/m^3$ |
| Surface | Al-foil faced on one side | - |

The following list contains suitable products for additional protection but may not be exhaustive:

| **Manufacturer** | **Product designation** |
|---|---|
| Isover | Ultimate U TFA 34 |
| Knauf | Lamella Forte LLMF AluR |
| Paroc | Lamella Mat 35 Alu Coat |
| Rockwool | Klimafix |
| Rockwool | Klimarock |
| Rockwool | Rockwool 133 (Lamella mat) |

### 1.2.12 Pipe insulation products

**Table 3: Specification for mineral wool products suitable for being used as pipe insulation**

| **Interrupted insulation** |
|---|
| Stone wool according to EN 14303, class A1 or A2 according to EN 13501-1, Al-faced |

| **Sustained insulation** | |
|---|---|
| **Manufacturer** | **Product designation** |
| Isover | Coquilla AT-LR |
| Isover | Protect BSR 90 alu |
| Paroc | Section AluCoat T |
| Rockwool | Conlit Pipe sections |
| Rockwool | Klimarock |
| Rockwool | RS 800 pipe sections |
| TP Termoprodukt | TP-Protect RS 1, TP-Protect RS 105,<br>TP-Protect RS 120, TP-Protect RS 150 |

**Table 4: Specification for foamed elastomeric insulation products suitable for being used as pipe insulation**

| **Manufacturer** | **Product designation** |
|---|---|
| Armacell International GmbH | Armaflex AF, Armaflex SH, Armaflex Ultima, Armaflex XG, Armaflex NH, Armaflex HT |
| NMC Group | Insul-Tube H-Plus (nmc), |
| Kaimann GmbH | Kaiflex KK plus, Kaiflex KK, Kaiflex HF plus |
| L'Isolante K-Flex | l'Isolante K-Flex ECO, l'Isolante K-Flex ST Frigo |
| Aeroflex NMC Deutschland | Aeroflex HF |
| Solar, Halkida, Greece | 3i - Isopipe HAT |
| HAT Isolierung Cosmo | Conel Flex HT |
| Union Foam S.p.A.Bellusco, Italia | Eurobatex |
| Würth | Flexen Kälteschlauch |
| Isidem Insulation Istanbul,Turkey | Isidem Coolflex AF |

Named material may be used as insulation hose, bandage/wrap or plates. If an additional protection $AP_x$ is used, it should be made of the same elastomeric material as the foamed elastomeric pipe isolation itself.

## 1.3 Technical product literature

- Technical data sheet Hilti Firestop Double Board Seal – Hilti Firestop Coating CFS-CT (including all components and ancillary products as defined in 1.1 and 1.2).

## 1.4 Installation

### 1.4.1 Installation of the penetration seal "Hilti Firestop Double Board Seal", when using a MW board according to Table 1 and Hilti Firestop Coating CFS-CT

The installation should be conducted as follows:

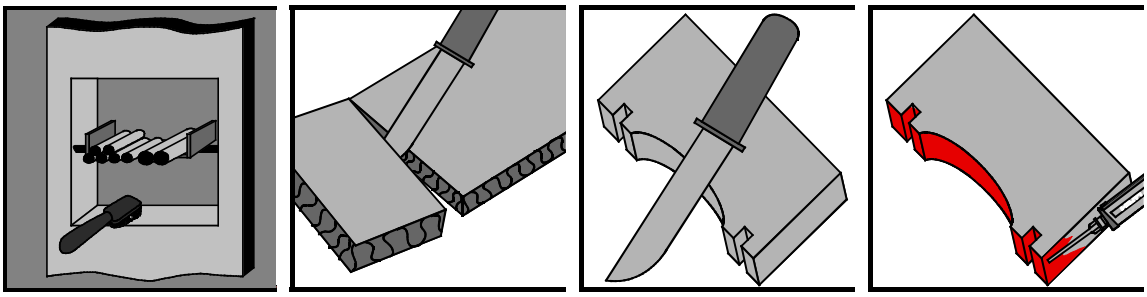

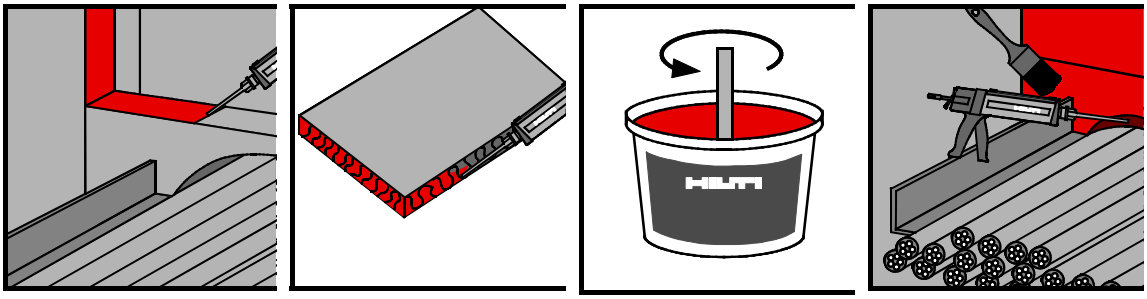

- In case $AP_1$, $AP_2$ or $AP_3$ is required:

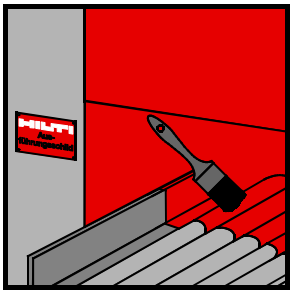

- In case $AP_4$ or $AP_5$ is required:

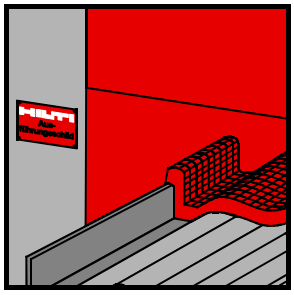

### 1.4.2 Installation of the penetration seal "Hilti Firestop Double Board Seal", when using the pre-coated boards Hilti Firestop Board CFS-CT B 1S or CFS-CT B 2S

The installation should be conducted as follows:

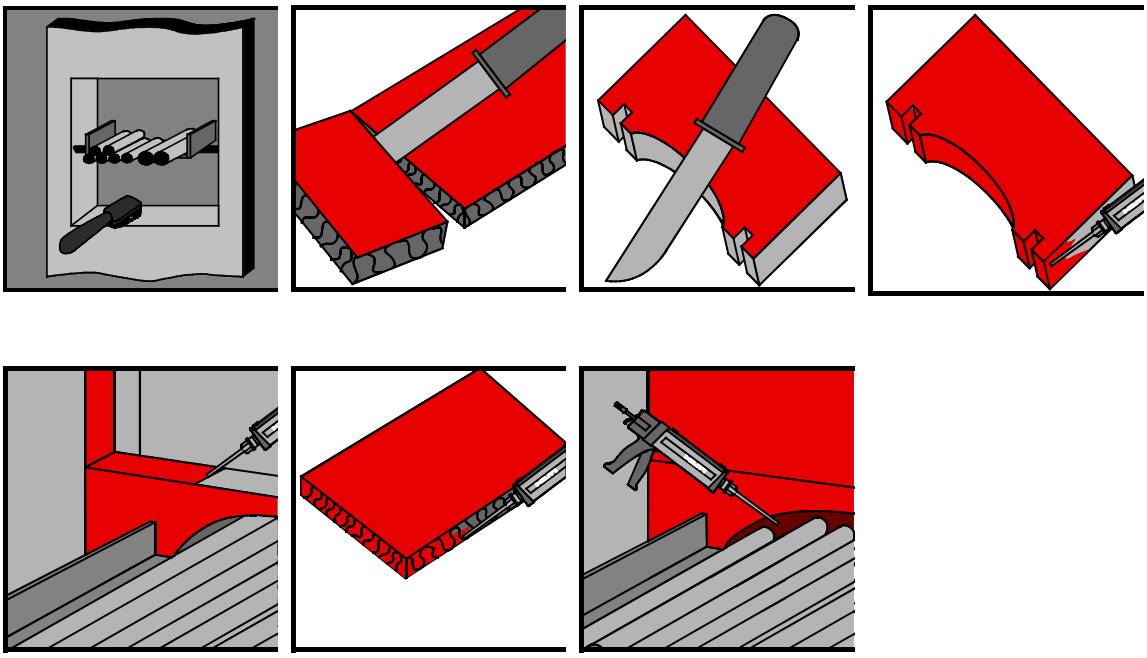

- In case $AP_1$, $AP_2$ or $AP_3$ is required:

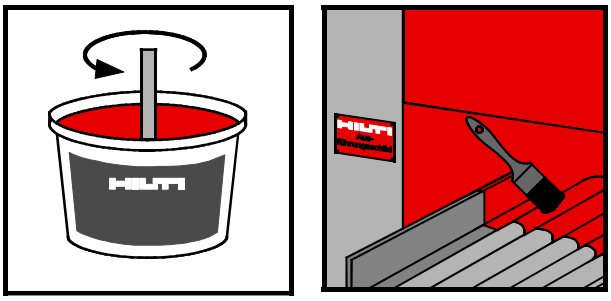

- In case $AP_4$ or $AP_5$ is required:

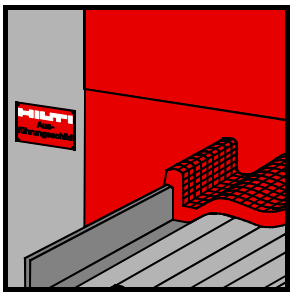

### 1.4.3 Application temperature

The intended application temperature range is: +5°C to +40°C

### 1.4.4 Re-penetration / removal of services

If single services (cables, pipes) are installed later on, a hole is drilled through the mineral wool panel and the services passed through; the remaining annular space has to be sealed with Hilti Firestop Acrylic Sealant CFS-S ACR. In case the coating has been damaged during installation of the additional service it must be repaired. Depending on the type of service and the required fire resistance additional firestopping components, e.g. Hilti Firestop Bandage CFS-B or Hilti Firestop Collars CFS-C or CFS-C P, and/or additional protections $AP_1$ to $AP_{10}$ according to 1.2 may be necessary – for details see Annex 2.

In case services are removed, the remaining hole has to be filled with mineral wool according to the specification given in Table 1 and coated with Hilti Firestop Coating CFS-CT. Before coating any gaps have to be filled with Hilti Firestop Acrylic Sealant CFS-S ACR.

## 1.5 Indications to the manufacturer

### 1.5.1 Packaging, transport and storage

In the accompanying document and/or on the packaging the manufacturer shall give information as to transport and storage.

At least the following shall be indicated: storing temperature, type of storage, maximum duration of storage and required data related to minimum temperature for transport and storage.

| | | |
|---|---|---|
| Storage: | Store in a dry place protected from moisture | |
| Storage temperature: | CFS-CT: | +5° up to max. +30°C |
| | CFS-CT B 1S/2S: | 0° up to max. +40°C |

### 1.5.2 Use, maintenance, repair

The fire resistance of penetration seals executed using Hilti Firestop Coating CFS-CT / Hilti Firestop Coated Boards CFS-CT B shall not be negatively affected by future changes to buildings or building elements.

The assessment of the fitness for use is based on the assumption that damaged seals are replaced or repaired. It is also assumed that replacement of components during maintenance/repair will be undertaken using materials specified by this European Technical Assessment.

# 2 ANNEX 2 RESISTANCE TO FIRE CLASSIFICATION OF PENETRATION SEALS HILTI FIRESTOP DOUBLE BOARD SEAL

## 2.1 General Information Hilti Firestop Double Board Seal

The seals may only be penetrated by the services described in Annex 2. Other parts or support constructions must not penetrate the seal.

The service support construction must be fixed to the building element containing the penetration seal or a suitable adjacent building element, on both sides of the penetration in such a manner that in the case of fire, no additional load is imposed on the seal. Furthermore it is assumed that this support is maintained on the unexposed side, for the required period of fire resistance.

Specific considerations:

- Pipes must be perpendicular to the seal surface.
- The function of the pipe seal in case of pneumatic dispatch systems, pressurised air systems etc. is guaranteed only when the systems are shut off in case of fire.
- The approval does not address any risks associated with leakage of dangerous liquids or gases caused by failure of the pipe(s) in case of fire.
- The durability assessment does not take account of the possible effect of substances permeating through the pipe on the penetration seal.

The classifications for metal, plastic and composite pipes relate to C/U (capped inside the furnace/uncapped outside), U/C (uncapped inside the furnace/capped outside) and U/U (uncapped inside the furnace/uncapped outside). For further information refer to national regulations.

| 2.1.1 **Intended use of penetrations and reference to relevant section** (list not exhaustive, other uses of pipes may be possible) | | | | **see section (Annex 2)** | | | |
|---|---|---|---|---|---|---|---|
| **Application** | **Penetration material** | **Manufacturer, product** (samples) | **Insulation** | Flexible & rigid wall ≥ 100 mm | Flexible & rigid wall ≥ 135 mm | Rigid wall ≥ 150 mm | Rigid floor ≥ 150 mm |
| **Cables** | Sheathed<br>Wires (non-sheathed)<br>tied bundles | | | 2.2.2<br>2.2.3 | | 2.4.1<br>2.5.1 | 2.6.2 |
| **Electrical conduits** | PVC, PO | | | 2.2.4 | | 2.4.2<br>2.5.2 | 2.6.3 |
| **Heating pipes** | Copper | | CI<br>CS | 2.2.5.1.2<br>2.2.5.2.3 | 2.3.1.1.2<br>2.3.1.2.3 | 2.4.3.2<br>2.5.3.3 | 2.6.4.1.2<br>2.6.4.2.3<br>2.6.4.3 |
| | Steel,<br>Stainless steel | | CI<br>CS | 2.2.5.1.1<br>2.2.5.2.1<br>2.2.5.2.2 | 2.3.1.1.1<br>2.3.1.2.1<br>2.3.1.2.2 | 2.4.3.1<br>2.5.3.1<br>2.5.3.2 | 2.6.4.1.1<br>2.6.4.2.1<br>2.6.4.2.2<br>2.6.4.3 |
| | Al-Composite | Geberit Mepla,PushFit<br>KeKelit Kelox,Uponor<br>Viega Sanfix+Raxofix<br>Rehau: Rautitan stabil | CS | 2.2.12.1-6 | | | 2.6.9<br>2.6.10<br>2.6.11.1-6 |
| **Potable water pipes** | Copper | | CI<br>CS<br>LI<br>LS | 2.2.5.1.2<br>2.2.5.2.3 | 2.3.1.1.2<br>2.3.1.2.3 | 2.4.3.2<br>2.5.3.3 | 2.6.4.1.2<br>2.6.4.2.3<br>2.6.4.3 |
| | Stainless steel | | CI | 2.2.5.2.2 | 2.3.1.2.2 | 2.5.3.2 | 2.6.4.2.2 |

| **Intended use of penetrations and reference to relevant section**<br>(list not exhaustive, other uses of pipes may be possible) | | | | **see section (Annex 2)** | | | |
|---|---|---|---|---|---|---|---|
| **Application** | **Penetration material** | **Manufacturer, product** (samples) | **Insulation** | Flexible & rigid wall ≥ 100 mm | Flexible & rigid wall ≥ 135 mm | Rigid wall ≥ 150 mm | Rigid floor ≥ 150 mm |
| **Potable water pipes** (cont.) | Al-Composite pipes | Geberit Mepla,PushFit<br>KeKelit Kelox,Uponor<br>Viega Sanfix+Raxofix<br>Rehau: Rautitan stabil | CS | 2.2.12.1-6 | | | 2.6.9<br>2.6.10<br>2.6.11.1-6 |
| | | | LS | 2.2.11.2<br>2.2.12.2 | | | |
| | PE-HD 100 RC | Wavin: Wavin TS | CS | 2.2.6.5<br>2.2.7.2.4 | | | 2.6.6.1.3 |
| | | | LS | 2.2.7.4.4 | | | 2.6.6.2.3 |
| | PE-X | Rehau: Rautitan flex | CS | 2.2.7.2.1 | | | 2.6.6.1.4 |
| | | | LS | 2.2.7.4.1 | | | 2.6.6.2.4 |
| | PP | Aquatherm: Fusiotherm | CS | 2.2.7.2.2<br>2.2.7.2.3 | | | 2.6.6.1.1<br>2.6.6.1.2 |
| | | | LS | 2.2.7.4.2<br>2.2.7.4.3 | | | 2.6.6.2.1<br>2.6.6.2.2 |
| | PB | Geberit PushFit PB | CS | 2.2.11.6.13 | | | 2.6.10.5.<br>12 |
| | | | | | | | |
| | PVC-C | Friatec: Friatherm starr | CS | 2.2.7.2.5 | | | 2.6.6.1.7 |
| | | | LS | 2.2.7.4.5 | | | 2.6.6.2.7 |

| **Intended use of penetrations and reference to relevant section**<br>(list not exhaustive, other uses of pipes may be possible) | | | | **see section (Annex 2)** | | | |
|---|---|---|---|---|---|---|---|
| **Application** | **Penetration material** | **Manufacturer, product** (samples) | **Insulation** | Flexible & rigid wall ≥ 100 mm | Flexible & rigid wall ≥ 135 mm | Rigid wall ≥ 150 mm | Rigid floor ≥ 150 mm |
| **Chilled water pipes** | Copper | | CS | 2.2.5.1.2<br>2.2.5.2.3 | 2.3.1.1.2<br>2.3.1.2.3 | 2.4.3.2<br>2.5.3.3 | 2.6.4.1.2<br>2.6.4.2.3<br>2.6.4.3 |
| | Steel, Stainless steel | | CS | 2.2.5.1.1<br>2.2.5.2.1<br>2.2.5.2.2 | 2.3.1.1.1<br>2.3.1.2.1<br>2.3.1.2.2 | 2.4.3.1<br>2.5.3.1<br>2.5.3.2 | 2.6.4.1.1<br>2.6.4.2.1<br>2.6.4.2.2<br>2.6.4.3 |
| | PE | EN ISO 15494, DIN 8074/8075 | | 2.2.6.3<br>2.2.8.2<br>2.2.9.3 | 2.3.2.2 | | 2.6.5.2<br>2.6.7.2<br>2.6.8.2.2 |
| | PE-HD 100 RC | Wavin: Wavin TS | CS | 2.2.6.5<br>2.2.7.2.4 | | | 2.6.6.1.3 |
| | | | LS | 2.2.7.4.4 | | | 2.6.6.2.3 |
| | Multi-layer | GF: Coolfit | | 2.2.6.8 | | | 2.6.5.9 |
| | PP | Aquatherm: Climatherm<br>Aquatherm: Fusiotherm | CS | 2.2.7.2.2<br>2.2.7.2.3 | | | 2.6.6.1.1<br>2.6.6.1.2<br>2.6.6.1.5 |
| | | | LS | 2.2.7.4.2<br>2.2.7.4.3 | | | 2.6.6.2.1<br>2.6.6.2.2<br>2.6.6.2.5 |

| **Intended use of penetrations and reference to relevant section**<br>(list not exhaustive, other uses of pipes may be possible) | | | | **see section (Annex 2)** | | | |
|---|---|---|---|---|---|---|---|
| **Application** | **Penetration material** | **Manufacturer, product** (samples) | **Insulation** | Flexible & rigid wall ≥ 100 mm | Flexible & rigid wall ≥ 135 mm | Rigid wall ≥ 150 mm | Rigid floor ≥ 150 mm |
| **Waste water pipes Storm water / Roof drainage pipes** | Cast iron, SML | | | 2.2.5.1.1<br>2.2.5.2.1 | 2.3.1.1.1<br>2.3.1.2.1 | 2.4.3.1<br>2.5.3.1 | 2.6.4.1.1<br>2.6.4.2.1<br>2.6.4.3 |
| | PE | EN1519 | | 2.2.6.2<br>2.2.7.1<br>2.2.7.3<br>2.2.8.3<br>2.2.9.1 | | | 2.6.5.3<br>2.6.8.2.1 |
| | PE-S2 | Geberit: Silent -db20 | | 2.2.6.4<br>2.2.9.6 | | | 2.6.5.4<br>2.6.5.7<br>2.6.8.2.3 |
| | PP | Rehau “Raupiano Plus”,<br>Magnaplast „Skolan-dB“,<br>Wavin “Wavin AS”,<br>“Wavin SiTech”<br>KeKelit “Phonex AS”,<br>Poloplast “Polokal NG,<br>Polokal 3S”<br>Geberit “Siltent PP”,<br>Coes “Blue Power”,<br>“PhoNoFire”,<br>Valsir “Triplus”, “Silere”,<br>Pipelife “Master 3” | | 2.2.6.6<br>2.2.9.4<br>2.2.9.5 | | | 2.6.5.6<br>2.6.8.3 |

| **Intended use of penetrations and reference to relevant section**<br>(list not exhaustive, other uses of pipes may be possible) | | | | **see section (Annex 2)** | | | |
|---|---|---|---|---|---|---|---|
| **Application** | **Penetration material** | **Manufacturer, product** (samples) | **Insulation** | Flexible & rigid wall ≥ 100 mm | Flexible & rigid wall ≥ 135 mm | Rigid wall ≥ 150 mm | Rigid floor ≥ 150 mm |
| **Waste water pipes Storm water / Roof drainage pipes** (continue) | PVC-U | EN ISO 1452 | | 2.2.6.1<br>2.2.8.1<br>2.2.9.1 | 2.3.2.1 | 2.4.4 | 2.6.5.1<br>2.6.5.2<br>2.6.7.1<br>2.6.8.1 |
| | PP | EN 1455-1, EN15874 | | 2.2.6.6,<br>2.2.6.7 | | | |

| **Intended use of penetrations and reference to relevant section**<br>(list not exhaustive, other uses of pipes may be possible) | | | | **see section (Annex 2)** | | | |
|---|---|---|---|---|---|---|---|
| **Application** | **Penetration material** | **Manufacturer, product** (samples) | **Insulation** | Flexible & rigid wall ≥ 100 mm | Flexible & rigid wall ≥ 135 mm | Rigid wall ≥ 150 mm | Rigid floor ≥ 150 mm |
| **Pneumatic pipes** | Steel | | | 2.2.4 | | 2.4.2<br>2.5.2 | 2.6.3 |
| | PVC-U | EN ISO 1452 | | 2.2.6.1<br>2.2.8.1<br>2.2.9.1 | 2.3.2.1 | 2.4.4 | 2.6.5.1<br>2.6.5.2<br>2.6.7.1<br>2.6.8.1 |

| **Intended use of penetrations and reference to relevant section**<br>(list not exhaustive, other uses of pipes may be possible) | | | | **see section (Annex 2)** | | | |
|---|---|---|---|---|---|---|---|
| **Application** | **Penetration material** | **Manufacturer, product** (samples) | **Insulation** | Flexible & rigid wall ≥ 100 mm | Flexible & rigid wall ≥ 135 mm | Rigid wall ≥ 150 mm | Rigid floor ≥ 150 mm |
| **Industry pipes** | Copper | | CS | 2.2.5.1.2<br>2.2.5.2.3 | 2.3.1.1.2<br>2.3.1.2.3 | 2.4.3.2<br>2.5.3.3 | 2.6.4.1.2<br>2.6.4.2.3<br>2.6.4.3 |
| | | | CI | | | | |
| | | | LS | | | | |
| | | | LI | | | | |
| | Steel, stainless steel | | CS | 2.2.5.1.1<br>2.2.5.2.1<br>2.2.5.2.2 | 2.3.1.1.1<br>2.3.1.2.1<br>2.3.1.2.2 | 2.4.3.1<br>2.5.3.1<br>2.5.3.2 | 2.6.4.1.1<br>2.6.4.2.1<br>2.6.4.2.2<br>2.6.4.3 |
| | | | CI | | | | |
| | | | LS | | | | |
| | | | LI | | | | |
| | Al-Composite pipes | Geberit: Mepla<br>Rehau: Rautitan stabil<br>KeKelit: Kelox KM 110 | CS | 2.2.10.1<br>2.2.11.1<br>2.2.12.1 | | | 2.6.9<br>2.6.10 |
| | | | LS | 2.2.11.2<br>2.2.12.2 | | | |
| | PE | EN ISO 15494, DIN 8074/8075 | | 2.2.6.3<br>2.2.8.2<br>2.2.9.3 | 2.3.2.2 | | 2.6.5.2<br>2.6.7.2<br>2.6.8.2.2 |
| | PE-HD 100 RC | Wavin: Wavin TS | | 2.2.6.5<br>2.2.7.2.4<br>2.2.7.4.4 | | | 2.6.5.5<br>2.6.6.1.3<br>2.6.6.2.3 |

| **Intended use of penetrations and reference to relevant section**<br>(list not exhaustive, other uses of pipes may be possible) | | | | **see section (Annex 2)** | | | |
|---|---|---|---|---|---|---|---|
| **Application** | **Penetration material** | **Manufacturer, product**<br>(samples) | **Insulation** | Flexible & rigid wall<br>≥ 100 mm | Flexible & rigid wall<br>≥ 135 mm | Rigid wall ≥<br>150 mm | Rigid floor ≥<br>150 mm |
| **Industry pipes**<br>(cont.) | PE-S2 | Geberit: Silent -db20 | | 2.2.6.4<br>2.2.9.6 | | | 2.6.5.4<br>2.6.5.7<br>2.6.8.2.3 |
| | PP | Rehau "Raupiano Plus", Magnaplast „Skolan-dB",<br>Wavin "Wavin AS", "Wavin SiTech"<br>KeKelit "Phonex AS",<br>Poloplast "Polokal NG, Polokal 3S"<br>Geberit "Siltent PP",<br>Coes "Blue Power", "PhoNoFire",<br>Valsir "Triplus", "Silere",<br>Pipelife "Master 3" | | 2.2.6.6<br>2.2.9.4<br>2.2.9.5 | | | 2.6.5.6<br>2.6.8.3 |
| | PP fibre compound | EN ISO 15874<br>Aquatherm: Fusiotherm,<br>Aquatherm: Climatherm<br>Aquatherm: Firestop<br>+GF+: Progef standard pipe<br>+GF+: Dekaprop Industry pipe | | 2.2.6.7<br>2.2.7.2.2<br>2.2.7.2.3<br>2.2.7.4.2<br>2.2.7.4.3 | | | 2.6.5.7<br>2.6.5.8<br>2.6.6.1.1<br>2.6.6.1.2<br>2.6.6.1.5<br>2.6.6.1.6<br>2.6.6.2.1<br>2.6.6.2.2<br>2.6.6.2.5<br>2.6.6.2.6 |
| | PVC-U | EN ISO 15494, DIN 8074/8075 | | | 2.3.2.1 | 2.4.4 | |
| | PVC-C | Aquatherm: Friatherm starr | | 2.2.7.2.5<br>2.2.7.4.5 | | | 2.6.6.1.7<br>2.6.6.2.7 |

| **Intended use of penetrations and reference to relevant section**<br>(list not exhaustive, other uses of pipes may be possible) | | | | **see section (Annex 2)** | | | |
|---|---|---|---|---|---|---|---|
| **Application** | **Penetration material** | **Manufacturer, product** (samples) | **Insulation** | Flexible & rigid wall ≥ 100 mm | Flexible & rigid wall ≥ 135 mm | Rigid wall ≥ 150 mm | Rigid floor ≥ 150 mm |
| **Industry pipes** (cont.) | Pre-isolated multi-layer | GF: Coolfit | | 2.2.6.8 | | | 2.6.5.9 |
| | Special pellet pipe | CASTAN: Sciroppo AS<br>Erich Kuhn: PVC NW51<br>Haberkorn: PVC Saug-/Druckschl.<br>Heizmann: Noviatox NW51<br>Rehau: RAUSPIRAFLEX | | 2.2.6.9 | | | 2.6.5.10 |

### 2.1.2 Additional protection for cable/small conduit penetrations

Depending on the required fire resistance additional protection (AP) may be required (for details see Annex 2):

**AP1**: cables / small conduits coated with Hilti Firestop Coating CFS-CT over a length of the cables / small conduits of 150 mm from the surface of the seal, thickness 0.7 mm.

**AP2**: cables / small conduits coated with Hilti Firestop Coating CFS-CT over a length of the cables / small conduits of 200 mm from the surface of the seal, thickness 1 mm.

**AP3**: cables / small conduits coated with Hilti Firestop Coating CFS-CT over a length of the cables / small conduits of 200 mm from the surface of the seal, thickness 2 mm.

**AP4**: Mineral wool mat according to Table 2, wrapped around cables /cable support (trays, ladders), Al-faced side outside, fixed with wire, width (length along the cables/small conduits) 200 mm, thickness 20 mm.

**AP5**: Mineral wool mat according to Table 2, wrapped around cables /cable support (trays, ladders), Al-faced side outside, fixed with wire, width (length along the cables/small conduits) 200 mm, thickness 30 mm.

### 2.1.3 Additional components for composite and plastic pipe penetrations

In some cases of metal pipes or composite pipes insulated with combustible insulation (reaction to fire class B to E according EN 13501-1) a Hilti Firestop Bandage CFS-B (see ETA-10/0212) is wrapped around the pipe insulation on each side of the seal (with floor applications in some cases only on bottom side). The bandage is positioned with half of its width (62.5 mm) within the seal (central marking line at the surface of the seal) and fixed with wire. For necessary number of layers of the bandage see Annex 2.

In some cases an additional protection (AP) over the bandage is required. Two types of additional protection as described below may be used - for details see Annex 2:

**AP6**: Armaflex AF pipe insulation wrapped around the bandage/pipe insulation, fixed with wire, length along the pipe 300 mm, thickness 19 mm or 32 mm.

**AP7**: Mineral wool mat according to Table 2, wrapped around the bandage/pipe insulation, fixed with wire, length along the pipe 300 mm, thickness 20 mm.

In some cases (see Annex 2) Hilti Firestop Wrap CFS-W EL / SG (see ETA-10/0405) or Hilti Firestop Wrap CFS-W P is wrapped around the pipe on each side of the seal (with floor applications on bottom side only) and positioned within the annular gap so that the outer edge of the wrap is flush with the surface of the construction element. For necessary number of layers of the wrap and further details see Annex 2.

In some cases (see Annex 2) Hilti Firestop Collar CFS-C (see ETA-10/0403) , Hilti Firestop Collar CFS-C P (see ETA-10/0404) or Hilti Firestop Collar Endless CFS-C EL is placed around the pipe on each side of the seal (with floor applications on bottom side only) and fixed with threaded rods and nuts (see Annex 1.2.7). For required type of collar and further details see Annex 2.

In some cases for applications in 150 mm floors (see Annex 2) an additional internal mineral wool board is required:

**AP9**: Mineral wool board according to table 1 installed around the pipe in the air gap between the two layers of the Hilti Firestop Double Board Seal. Distance on all sides of the pipe 100 mm, depth 50 mm (height of the air gap).

### 2.1.4 Additional components for metal pipe penetrations

**AP8**: Mineral wool mat according to Table 2 in 1.2.11 wrapped around the pipe insulation, fixed with wire, length along the pipe 250 mm, thickness 40 mm. Applicable for isolated metal pipes too.

For details of the seal construction see Annex 2.

### 2.1.5 Additional components for cable penetrations

In some cases (see Annex 2) Hilti Firestop Sleeve CFS-SL M (see ETA-11/0153) is centered in the wall and fixed by means of two flanges delivered together with the sleeve.

**AP10**: Mineral wool acc. Table 2 wrapped around the Hilti Firestop Sleeve CFS-SL M on both sides of the seal over the total visible length of the sleeve, thickness 30 mm.

**AP11**: Duct tape (adhesive polyethylene based tape-width:50mm-length 200mm – number of layers:1)

**AP12**: Armaflex adhesive tape- thickness 3mm – position: over a length of 50mm wrapped around the pipe insulation

For details of the seal construction see Annex 2.

### 2.1.6 Non-regulated PP-pipes

There is a bigger group of non-regulated polypropylene-pipes, mineral reinforced, mainly used in waste water application. Most of them consist of a three-layer set-up. Those pipes have not specified according a common pipe standard. The following pipes are considered equal in their fire properties presupposed:

1. pipe diameter and pipe wall thickness are covered by the field of application shown within relevant chapters within this ETA

2. identical pipe-end configuration

3. identical used Hilti penetration seals

4. identical installation details (for instance: gap size, gap filling, basement thickness and density, first support,…)

- Rehau Raupiano
- Poloplast Polokal NG
- Wavin Sitech
- Geberit Silent PP
- Coes Blue Power
- Coes PhoNo Fire
- Valsir Triplus
- Pipelife Master 3
- Marley Silent
- Poloplast Polokal 3S
- Poloplast Polokal XS
- Ostendorf Skolan dB
- Geberit Silent Pro
- Valsir Silere
- Kekelit PhonEx AS
- Wavin AS
- Silenta Premium
- Wavin Sitech +
- Conel Drain Hausabflußrohr
- Uponor S&W Decibel

| 2.2 Flexible walls according to 2.1 a) and rigid walls according to 2.1 b), minimum thickness 100 mm | |
|---|---|
| **Penetration seal:**<br>Two 50 mm Hilti Firestop Boards CFS-CT B 1S[1] ($A_1$) or mineral wool boards according to Table 1 coated with Hilti Firestop Coating CFS-CT ($A_1$), dry thickness of coating 0.7 mm on the outer side[2], all cut edges of boards sealed with Hilti Firestop Acrylic Sealant CFS-S ACR, remaining gaps around cables / cable supports (trays, ladders etc.) and other services filled with Hilti Firestop Acrylic Sealant CFS-S ACR.<br>The boards have to be positioned flush to the surface of the building element on each side of the wall.<br>Maximum distance for 1st service support: 250 mm.<br>Maximum seal size: 1200 x 1200 mm (width x height) for classification EI 120, 1200 x 2000 mm (width x height) for classification EI 90.<br>Minimum distances in mm (see illustration below): | $s_1$ = 0 (distance between cables/cable supports and seal edge<br>$s_2$ = 0 (distance between cable supports)<br>$s_3$ = 0 (distance between cables and upper seal edge)<br>$s_4$ = 0 (distance between cable supports and bottom seal edge)<br>$s_5$ = 50 (distance between cables and cable support above)<br>$s_6$ = 3 (distance between metal pipes and seal edge)<br>$s_7$ = 3 (distance between metal pipes and upper seal edge)<br>$s_8$ = 0 (distance between metal pipes)<br>$s_9$ = 17 (distance between plastic pipes/pipe closure devices and seal edge)<br>$s_{10}$ = 17 (distance between plastic pipes/pipe closure devices and upper seal edge)<br>$s_{11}$ = 0 (distance between plastic pipes/pipe closure devices)<br>$s_{12}$ = 30 (distance between metal pipes and plastic pipes/pipe closure devices)<br>$s_{13}$ = 3 (distance between cables/cable supports and metal pipes)<br>$s_{14}$ = 40 (distance between cables/cable supports and plastic pipes/pipe closure devices) |

1 Hilti Firestop Boards CFS-CT B 2S (coated on both faces) may also be used

2 The board may also be coated on both faces

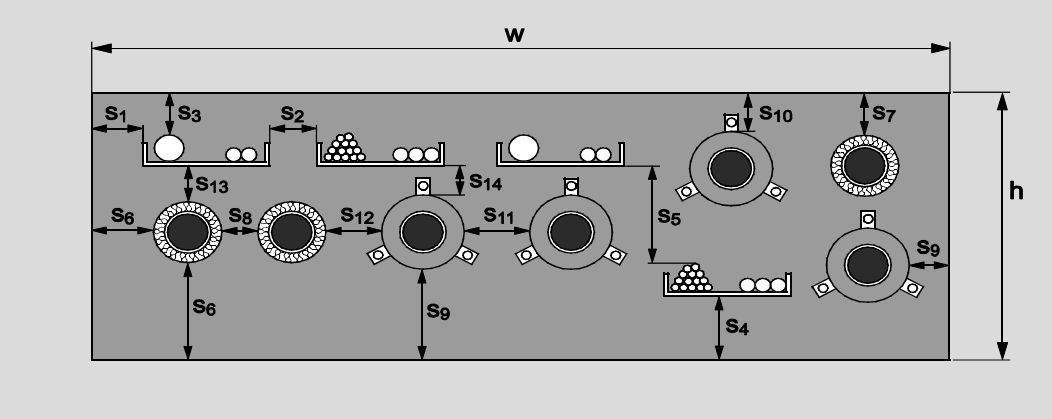


**Penetrating services :(single, multiple or mixed)**

| 2.2.1 **Blank seal (no services) *** | |
|---|---|
| Construction details (for symbols and abbreviations see Annex 4): | Classification |
| 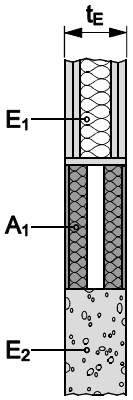  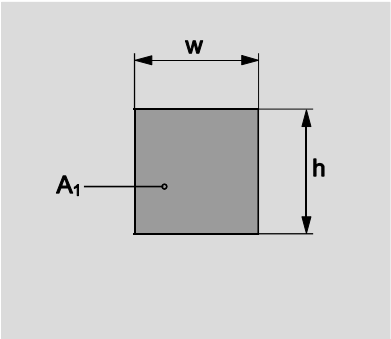  * If services are added later on in a blank seal only the services listed in the tables below may be added that fulfil the required classification | |
| Maximum size 1200mm x 1200 mm (width **w** x height **h**) | EI 120 |

## 2.2.2 Cables

Construction details (for symbols and abbreviations see Annex 4):

Additional protection $AP_3$, $AP_4$ or $AP_5$ according to 1.2. may be used. $AP_4$ and $AP_5$ are illustrated below.

$AP_3$: cables/small conduits coated with Hilti Firestop Coating CFS-CT on both sides of the seal over a length of the cables/small conduits of 200 mm from the surface of the seal, thickness 2 mm.

$AP_4$: Mineral wool mat according to Table 2, wrapped around cables /cable support (trays, ladders) on both sides of the seal, Al-faced side outside, fixed with wire, width (length along the cables/small conduits) 200 mm, thickness 20 mm.

$AP_5$: Mineral wool mat according to Table 2, wrapped around cables /cable support (trays, ladders) on both sides of the seal, Al-faced side outside, fixed with wire, width (length along the cables/small conduits) 200 mm, thickness 30 mm.

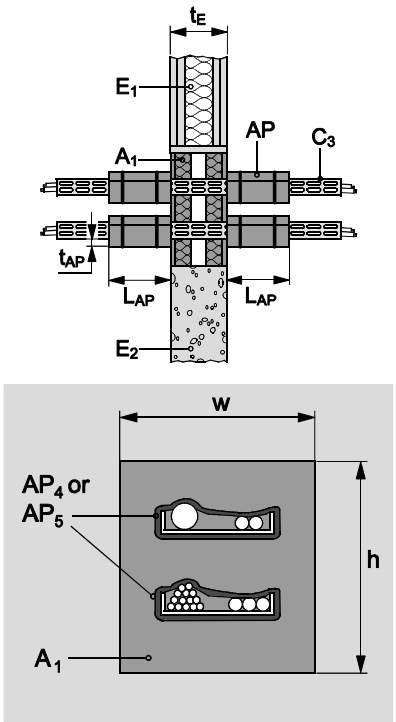


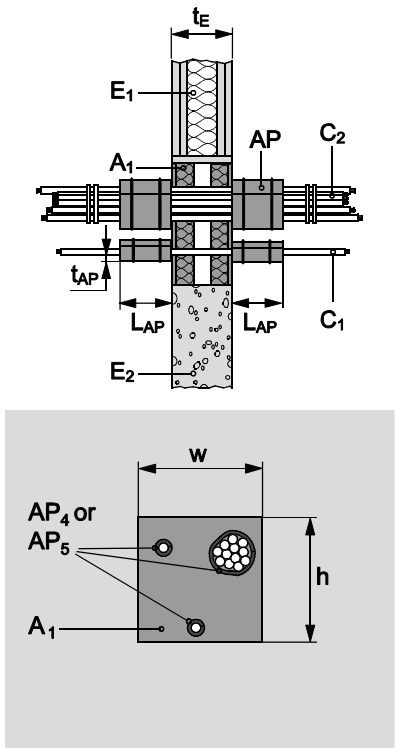

| | Classification | | |
|---|---|---|---|
| Additional protection according to 1.2: | $AP_3$ | $AP_4$ | $AP_5$ |
| All sheathed cable types currently and commonly used in building practice in Europe (e.g. power, control, signal, telecommunication, data, optical fibre cables, with or without cable supports, with a diameter of: | | | |
| Maximum Ø 21 mm | EI 90 | EI 120 | EI 120 |
| 21 ≤ Ø ≤ 50 mm | EI 90 | EI 90 | EI 120 |
| 50 ≤ Ø ≤ 80 mm | EI 90 | EI 90 | EI 120 |
| Non-sheathed cables (wires) currently and commonly used in building practice in Europe, with or without cable supports, with a diameter of: | | | |
| Maximum Ø 17 mm | EI 60 | EI 120 | EI 120 |
| Maximum Ø 24 mm | EI 60 | EI 120 | EI 120 |
| Tied cable bundle, maximum diameter of single cable 21 mm, with or without cable supports | | | |
| Maximum Ø 100 mm | EI 90 | EI 120 | EI 120 |

## 2.2.3 Cables with Hilti Firestop Sleeve CFS-SL M and Hilti Firestop Sleeve CFS-SL GA

Construction details
(for symbols and abbreviations see Annex 4):

Hilti Firestop Sleeve CFS-SL M or CFS-SL GA ($A_5$) centered in the wall and fixed by means of two flanges delivered together with the sleeve.

For Hilti Firestop Sleeve CFS-SL GA ($A_5$);
Use Hilti Firestop Acrylic Sealant CFS-S ACR to seal the gap between the metallic sleeve and the board CFS-CT perimeter seal edge.
Install some CFS-S ACR onto the CFS-CT surface around the installed Sleeve before screwing the flanges tightly to board surface.

$AP_{10}$: Mineral wool acc. Table 2 wrapped around the Hilti Firestop Sleeve CFS-SL M on both sides of the seal over the total visible length of the sleeve, thickness 30 mm

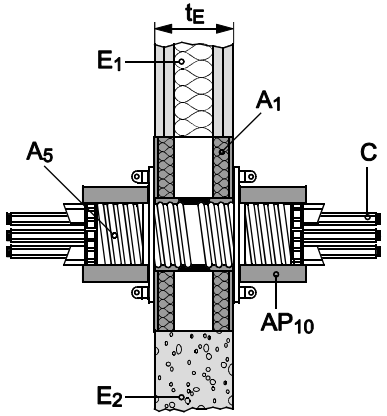


| | Classification |
|---|---|
| All sheathed cable types currently and commonly used in building practice in Europe (e.g. power, control, signal, telecommunication, data, optical fibre cables) with a<br>maximum Diameter: Ø ≤ 21 mm | EI 120 |

## 2.2.4 Small conduits and tubes

Construction details: see 2.2.2

| | Classification | | |
|---|---|---|---|
| Ø ≤ 16 mm, wall thickness ≥ 1 mm, arranged linear, with or without cables, with or without cable supports | | | |
| Additional protection according to 1.2 | $AP_3$ | $AP_4$ | $AP_5$ |

| | | | |
|---|---|---|---|
| Plastic conduits and tubes | EI 120-U/C | EI 120-U/C | EI 120-U/U |
| Steel conduits and tubes | EI 90-C/U | EI 120-C/U | EI 120-U/U |

### 2.2.4.1 3 plastic conduits in 1 Hilti Firestop Collar CFS-C P – U/U

With and without cables

Construction details:

Hilti Firestop Collars CFS-C P ($A_3$) are installed on both sides of the seal, fixed together by threaded rods, washers and nuts as specified in Annex 1.2.

(for symbols and abbreviations see Annex 4):

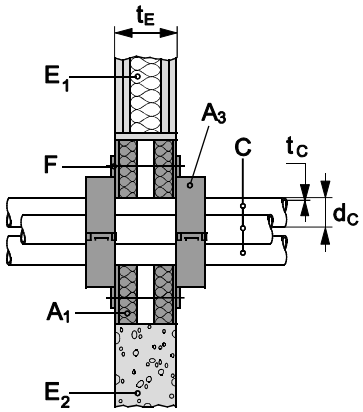


| Pipe diameter ($d_c$) [mm] | Pipe wall thickness $t_c$ [mm] | Pipe material / standard | Collar size ($A_3$) | No. of hooks | Classification |
|---|---|---|---|---|---|
| 16 | 1.0 | PVC, | CFS-C P 63/2” | 3 | EI 120-U/C |
| 25 | 1.5 | PVC | | | |
| 32 | 2 | Polyolefin | | | |

## 2.2.5 Metal pipes

### 2.2.5.1 Metal pipes with mineral wool insulation according to Table 3

Construction details (for symbols and abbreviations see Annex 4):

For higher classification additional protection $AP_8$ according to 1.2 may be used.

$AP_8$: Mineral wool mat according to Table 2, wrapped around the pipe insulation on both sides of the seal, fixed with wire, length along the pipe 250 mm, thickness 40 mm.

Continued insulation, interrupted (CI)

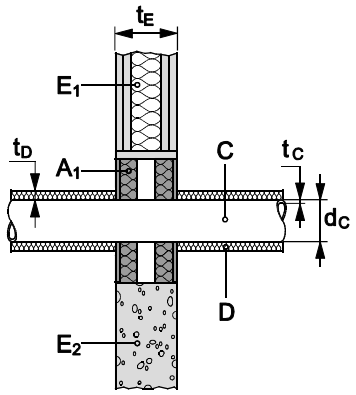


Continued insulation, sustained (CS)

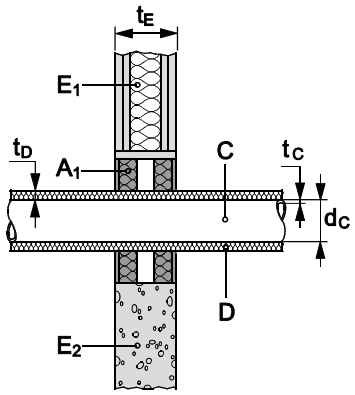


Local insulation, interrupted (LI)

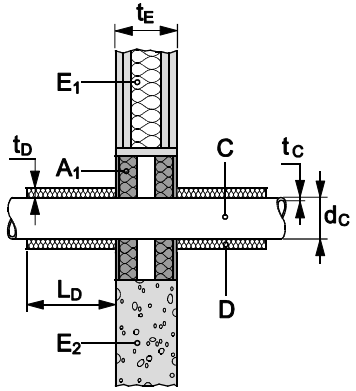


Local insulation, sustained (LS)

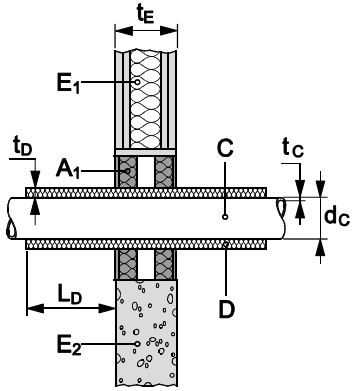

| 2.2.5.1.1 Steel pipes with mineral wool insulation according to Table 3 | | | | |
|---|---|---|---|---|
| **Steel pipes (C) with continued insulation (D) – sustained – C/U** | | | | |
| Pipe diameter ($d_C$) [mm] | Pipe wall thickness ($t_C$) [mm] | Insulation thickness ($t_D$) [mm] | Classification | |
| 48.3 | 1.6 - 14.2[3] | ≥ 20 | EI 90-C/U | |
| **Steel pipes (C) with continued insulation (D) – sustained – U/C** | | | | |
| Pipe diameter ($d_C$) [mm] | Pipe wall thickness ($t_C$) [mm] | Insulation thickness ($t_D$) [mm] | Classification | |
| Additional protection according 1.2 | | | - | $AP_8$ |
| 114.3 | 2.0 - 14.2 | ≥ 30 | EI 60-U/C | - |
| 114.3 | 2.0 - 14.2 | ≥ 40 | EI 120-U/C | - |
| 114.3 – 159.0 | 2.0/2.6 – 14.2[4] | ≥ 40 | EI 60-U/C | - |
| 159.0 | 2.6 - 14.2 | ≥ 40 | EI 60-U/C | EI 120-U/C |
| 159.0 - 323.9 | 2.6/4.0 – 14.2[5] | ≥ 40 | EI 60-U/C | EI 90-U/C |
| | | | | |

3 14.2 mm is the maximum value covered by the rules in EN 1366-3. This value may be limited by the particular pipe dimensions available in practice.

4 Interpolation of minimum wall thickness between 2.0 mmm for diameter 114.3 mm and 2.6 mm for diameter 159.0 mm for pipe diameters in between.

5 Interpolation of minimum wall thickness between 2.6 mm for diameter 159 mm and 4.0 mm for diameter 323.9 mm for pipe diameters in between.

| **Steel pipes (C) with continued insulation (D) – interrupted – C/U** | | | |
|---|---|---|---|
| Pipe diameter ($d_C$) [mm] | Pipe wall thickness ($t_C$) [mm] | Insulation thickness ($t_D$) [mm] | Classification |
| 26.9 | 1.4 – 14.2[10] | ≥ 40 | EI 120-C/U |
| 34.0 – 48.3 | 4.0 - 14.2[10] | ≥ 20 | EI 120-C/U |
| 48.3 | 1.6 - 14.2[10] | ≥ 20 | EI 120-C/U |
| 34.0 - 114.3 | 3.6 - 14.2[10] | ≥ 30 | EI 120-C/U |
| **Steel pipes (C) with continued insulation (D) – interrupted – U/C** | | | |
| Pipe diameter ($d_C$) [mm] | Pipe wall thickness ($t_C$) [mm] | Insulation thickness ($t_D$) [mm] | Classification |
| 114.3 | 2.0 - 14.2[10] | ≥ 30 | EI 120-U/C |
| 114.3 – 159.0 | 2.0/2.6 – 14.2[11] | ≥ 40 | EI 120-U/C |
| 159.0 - 323.9 | 2.6/4.0 – 14.2[12] | ≥ 40 | EI 60-U/C |

| **Steel pipes (C) with local insulation (D) – sustained – C/U** | | | | |
|---|---|---|---|---|
| Pipe | | Insulation | | Classification |
| diameter ($d_C$) [mm] | wall thickness ($t_C$) [mm] | thickness ($t_D$) [mm] | length ($L_D$) [mm] | |
| 48.3 | 1.6 - 14.2[10] | 20 | ≥ 450 | EI 90-C/U |

| **Steel pipes (C) with local insulation (D) – sustained – U/C** | | | | | |
|---|---|---|---|---|---|
| Pipe | | Insulation | | Classification | |
| diameter ($d_C$) [mm] | wall thickness ($t_C$) [mm] | thickness ($t_D$) [mm] | length ($L_D$) [mm] | | |
| Additional protection according to 1.2: | | | | - | $AP_8$ |
| 114.3 | 2.0 - 14.2 | 30 - 40 | ≥ 500 | EI 60-U/C | - |
| 114.3 – 159.0 | 2.0/2.6 – 14.2[11] | 40 | ≥ 500 | EI 45-U/C | - |
| 114.3 | 2.0 - 14.2 | 40 | ≥ 1000 | EI 120-U/C | - |
| 159.0 | 2.6 - 14.2 | 40 | ≥ 1000 | EI 60- U/C | EI 90-U/C |
| 114.3 – 159.0 | 2.0/2.6 – 14.2[11] | 40 | ≥ 1000 | EI 60- U/C | - |
| 159.0 - 323.9 | 2.6/4.0 – 14.2[12] | 40 | ≥ 1000 | EI30-U/C | - |

| **Steel pipes (C) with local insulation (D) – interrupted – C/U** | | | | |
|---|---|---|---|---|
| Pipe | | Insulation | | Classification |
| diameter ($d_C$) [mm] | wall thickness ($t_C$) [mm] | thickness ($t_D$) [mm] | length ($L_D$) [mm] | |
| 26.9 | 1.4 – 14.2[10] | 40 | ≥ 500 | EI 120-C/U |
| 34.0 – 48.3 | 4.0 - 14.2[10] | 20 | ≥ 500 | EI 120-C/U |
| 48.3 | 1.6 - 14.2[10] | 20 | ≥ 500 | EI 120-C/U |
| 114.3 | 3.6 - 14.2 | 30 | ≥ 500 | EI 120-C/U |
| **Steel pipes (C) with local insulation (D) – interrupted – U/C** | | | | |
| Pipe | | Insulation | | Classification |
| diameter ($d_C$) [mm] | wall thickness ($t_C$) [mm] | thickness ($t_D$) [mm] | length ($L_D$) [mm] | |
| 114.3 | 2.0 – 14.2 | 30 - 40 | ≥ 500 | EI 60-U/C |
| 114.3 – 159.0 | 2.0/2.6 – 14.2[11] | 40 | ≥ 500 | EI 45-U/C |
| 114.3 | 2.0 – 14.2 | 40 | ≥ 1000 | EI 120-U/C |
| 114.3 – 159.0 | 2.0/2.6 – 14.2[11] | 40 | ≥ 1000 | EI 90-U/C |
| 159.0 – 323.9 | 2.6/4.0 – 14.2[12] | 40 | ≥ 1000 | EI 30-U/C |

| 2.2.5.1.2 Copper pipes with mineral wool insulation according to Table 3 | | | | |
|---|---|---|---|---|
| **Copper pipes (C) with continued insulation (D) – sustained – C/U** | | | | |
| Pipe diameter ($d_C$) [mm] | Pipe wall thickness ($t_C$) [mm] | Insulation thickness ($t_D$) [mm] | Classification | |
| 28 | 1.0 – 14.2[10] | ≥ 20 | EI 120-C/U | |
| 28 - 42 | 1.0/1.5 - 14.2[10, 6] | ≥ 20 | EI 60-C/U | |
| 28 - 42 | 1.0/1.5 - 14.2[10, 13] | ≥ 40 | EI 120-C/U | |
| **Copper pipes (C) with continued insulation (D) – sustained – U/C** | | | | |
| Pipe diameter ($d_C$) [mm] | Pipe wall thickness ($t_C$) [mm] | Insulation thickness ($t_D$) [mm] | Classification | |
| Additional protection according 1.2 | | | - | $AP_8$ |
| 10 - 40 | 1.0/1.5 - 14.2[10, 7] | ≥ 20 | EI 120-U/C | - |
| 40 – 88.9 | 1.5/2.0 - 14.2[10, 8] | ≥ 40 | EI 90-U/C | EI 120-U/C |
| | | | - | |
| **Copper pipes (C) with continued insulation (D) – interrupted – C/U** | | | | |
| Pipe diameter ($d_C$) [mm] | Pipe wall thickness ($t_C$) [mm] | Insulation thickness ($t_D$) [mm] | Classification | |
| 28 | 1.0 – 14.2[10] | ≥ 20 | EI 120-C/U | |
| 28 - 42 | 1.0/1.5 - 14.2[10, 13] | ≥ 40 | EI 120-C/U | |
| **Copper pipes (C) with continued insulation (D) – interrupted – U/C** | | | | |
| Pipe diameter ($d_C$) [mm] | Pipe wall thickness ($t_C$) [mm] | Insulation thickness ($t_D$) [mm] | Classification | |
| 10 - 40 | 1.0/1.5 - 14.2[10, 14] | ≥ 20 | EI 120-U/C | |
| 40 – 88.9 | 1.5/2.0 - 14.2[10, 15] | ≥ 40 | EI 120-U/C | |

6 Interpolation of minimum wall thickness between 1.0 mmm for diameter 28 mm and 1.5 mm for diameter 42 mm for pipe diameters in between.

7 Interpolation of minimum wall thickness between 1.0 mmm for diameter 10 mm and 1.5 mm for diameter 40 mm for pipe diameters in between.

8 Interpolation of minimum wall thickness between 1.5 mmm for diameter 40 mm and 2.0 mm for diameter 88.9 mm for pipe diameters in between.

| **Copper pipes (C) with local insulation (D) – sustained – C/U** | | | | |
|---|---|---|---|---|
| Pipe | | Insulation | | Classification |
| diameter ($d_C$) [mm] | wall thickness ($t_C$) [mm] | thickness ($t_D$) [mm] | length ($L_D$) [mm] | |
| 28 | 1.0 – 14.2[10] | 20 | ≥ 450 | EI 120-C/U |
| 42 | 1.5 – 14.2[10] | 20 | ≥ 450 | EI 60-C/U |
| 42 | 1.5 – 14.2[10] | 40 | ≥ 800 | EI 120-C/U |
| **Copper pipes (C) with local insulation (D) – sustained – U/C** | | | | |
| Pipe | | Insulation | | Classification |
| diameter ($d_C$) [mm] | wall thickness ($t_C$) [mm] | thickness ($t_D$) [mm] | length ($L_D$) [mm] | |
| 10 | 1.0 – 14.2[10] | 20 – 30 | ≥ 500 | EI 120-U/C |
| 10 - 40 | 1.0/1.5 - 14.2[10, 14] | 20 | ≥ 500 | EI 120-U/C |
| 40 – 88.9 | 1.5/2.0 - 14.2[10, 15] | 40 | ≥ 1000 | EI 90-U/C |
| **Copper pipes (C) with local insulation (D) – interrupted – C/U** | | | | |
| Pipe | | Insulation | | Classification |
| diameter ($d_C$) [mm] | wall thickness ($t_C$) [mm] | thickness ($t_D$) [mm] | length ($L_D$) [mm] | |
| 28 - 42 | 1.0/1.5 - 14.2[10, 13] | 20 | ≥ 500 | EI 120-C/U |
| 42 | 1.5 – 14.2[10] | 40 | ≥ 800 | EI 120-C/U |
| **Copper pipes (C) with local insulation (D) – interrupted – U/C** | | | | |
| Pipe | | Insulation | | Classification |
| diameter ($d_C$) [mm] | wall thickness ($t_C$) [mm] | thickness ($t_D$) [mm] | length ($L_D$) [mm] | |
| 10 | 1.0 – 14.2[10] | 20 - 30 | ≥ 500 | EI 120-U/C |
| 10 - 40 | 1.0/1.5 - 14.2[10, 14] | 20 | ≥ 500 | EI 120-U/C |
| 40 – 88.9 | 1.5/2.0 - 14.2[10, 15] | 40 | ≥ 1000 | EI 90-U/C |
| The field of application given above for copper pipes is also valid for other metal pipes with lower heat conductivity than copper and a melting point of minimum 1100°C, e.g. unalloyed steel, low alloyed steel, cast iron, stainless steels, Ni alloys (NiCu, NiCr and NiMo alloys) and Ni. | | | | |

| 2.2.5.2 Metal pipes with foamed elastomeric insulation according Table 4 and Hilti Firestop Bandage CFS-B | |
|---|---|
| Construction details (for symbols and abbreviations see Annex 4):<br>For specification of the foamed elastomeric insulation material to be used see Table 4.<br>Two layers of Firestop Bandage CFS-B ($A_2$) wrapped around the pipe insulation, on each side of the seal. The bandage is positioned with half of its width (62.5 mm) within the seal (central marking line at the surface of the seal) and outside the seal fixed with wire.<br>Additional protection:<br>Over the bandage/pipe insulation an additional protection $AP_6$ according to 1.2 is installed:<br>For pipe end configuration C/U: AF/Armaflex pipe insulation wrapped around the bandage/pipe insulation on each side of the seal, fixed with wire, length ($L_{AP}$) = 300 mm on each side, thickness ($t_{AP}$) = 19 mm.<br>For pipe end configuration U/C: AF/Armaflex pipe insulation wrapped around the bandage/pipe insulation on each side of the seal, fixed with wire, length ($L_{AP}$) = 250 mm on each side, thickness ($t_{AP}$) = 32 mm. | |
| Continued insulation, sustained (CS)<br> 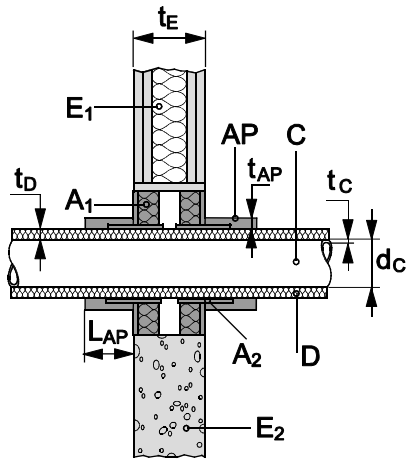 <br> | Local insulation, sustained (LS)<br> 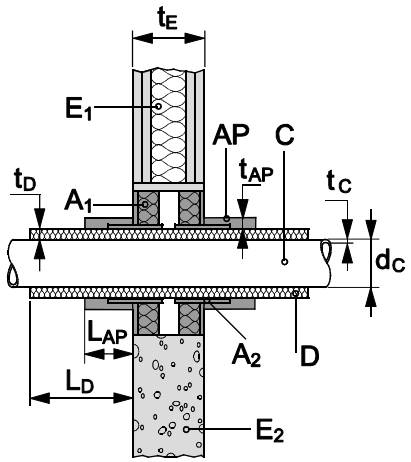 <br> |

| 2.2.5.2.1 Steel pipes with foamed elastomeric insulation according Table 4 and Hilti Firestop Bandage CFS-B | | | |
|---|---|---|---|
| **Steel pipes (C) with continued insulation (D) – sustained – C/U** | | | |
| Pipe diameter ($d_C$) [mm] | Pipe wall thickness ($t_C$) [mm] | Insulation thickness ($t_D$) [mm] | Classification |
| 60.3 | 3.6 - 14.2[10] | 21.5 - 39 | EI 90-C/U |
| 60.3 - 114.3 | 3.6 - 14.2[10] | 21.5 - 39 | EI 60-C/U |
| 114.3 | 3.6 - 14.2 | 43 | EI 90-C/U |
| **Steel pipes (C) with continued insulation (D) – sustained – U/C** | | | |
| Pipe diameter ($d_C$) [mm] | Pipe wall thickness ($t_C$) [mm] | Insulation thickness ($t_D$) [mm] | Classification |
| 114.3 | 2.0 – 14.2 | 9 - 20 | EI 90-U/C |
| 114.3 – 159.0 | 2.0/2.6 – 14.2[11] | 9 - 10 | EI 60-U/C |
| 159.0 | 2.6 – 14.2 | 10 - 45 | EI 60-U/C |

| **Steel pipes (C) with local insulation (D) – sustained – C/U** | | | | |
|---|---|---|---|---|
| Pipe | | Insulation | | Classification |
| diameter ($d_C$) [mm] | wall thickness ($t_C$) [mm] | thickness ($t_D$) [mm] | length ($L_D$) [mm] | |
| 60.3 | 3.6 - 14.2[10] | 21.5 - 39 | ≥ 500 | EI 90-C/U |
| 60.3 - 114.3 | 3.6 - 14.2[10] | 21.5 - 39 | ≥ 500 | EI 60-C/U |
| 114.3 | 3.6 - 14.2 | 43 | ≥ 500 | EI 90-C/U |
| The field of application given above for steel pipes is also valid for other metal pipes with lower heat conductivity than unalloyed steel and a melting point of minimum 1050°C, e.g. low alloyed steel, cast iron, stainless steels, Ni alloys (NiCu, NrCr and NiMo alloys) | | | | |

| 2.2.5.2.2 Stainless steel pipes with foamed elastomeric insulation according Table 4 and Hilti Firestop Bandage CFS-B | | | |
|---|---|---|---|
| **Stainless steel pipes (C) with continued insulation (D) – sustained – C/U** | | | |
| Pipe diameter ($d_C$) [mm] | Pipe wall thickness ($t_C$) [mm] | Insulation thickness ($t_D$) [mm] | Classification |
| 60.3 | 2.0 - 14.2[10] | 21.5 - 39 | EI 120-C/U |

| **Stainless steel pipes (C) with local insulation (D) – sustained – C/U** | | | | |
|---|---|---|---|---|
| Pipe | | Insulation | | Classification |
| diameter ($d_C$) [mm] | wall thickness ($t_C$) [mm] | thickness ($t_D$) [mm] | length ($L_D$) [mm] | |
| 60.3 | 2.0 - 14.2[10] | 21.5 - 39 | ≥ 500 | EI 120-C/U |

| 2.2.5.2.3 Copper pipes with foamed elastomeric insulation according Table 4 and Hilti Firestop Bandage CFS-B | | | |
|---|---|---|---|
| **Copper pipes (C) with continued insulation (D) – sustained – C/U** | | | |
| Pipe diameter ($d_C$) [mm] | Pipe wall thickness ($t_C$) [mm] | Insulation thickness ($t_D$) [mm] | Classification |
| 28 | 1.0 - 14.2[10] | 19 - 35 | EI 120-C/U |
| **Copper pipes (C) with continued insulation (D) – sustained – U/C** | | | |
| Pipe diameter ($d_C$) [mm] | Pipe wall thickness ($t_C$) [mm] | Insulation thickness ($t_D$) [mm] | Classification |
| 10 | 1.0 – 14.2[10] | 7.5 – 40.5 | EI 120-U/C |
| 10 - 40 | 1.0/1.5 – 14.2[10, 14] | 7.5 - 9 | EI 90-U/C |
| 40 – 88.9 | 1.5/2.0 – 14.2[15] | 9 – 9.5 | EI 45-U/C |
| 40 – 88.9 | 1.5/2.0 – 14.2[15] | 45.5 – 47.5 | EI 120-U/C |
| 88.9 | 2.0 – 14.2[10] | 9.5 – 47.5 | EI 45-U/C |
| 88.9 | 2.0 – 14.2[10] | 15 – 47.5 | EI 60-U/C |

| **Copper pipes (C) with local insulation (D) – sustained – C/U** | | | | |
|---|---|---|---|---|
| Pipe | | Insulation | | Classification |
| diameter ($d_C$) [mm] | wall thickness ($t_C$) [mm] | thickness ($t_D$) [mm] | length ($L_D$) [mm] | |
| 28 | 1.0 - 14.2[10] | 19 - 35 | ≥ 500 | EI 120-C/U |
| The field of application given above for copper pipes is also valid for other metal pipes with lower heat conductivity than copper and a melting point of minimum 1100°C, e.g. unalloyed steel, low alloyed steel, cast iron, stainless steels, Ni alloys (NiCu, NiCr and NiMo alloys) and Ni. | | | | |

## 2.2.6 Plastic pipes with Hilti Firestop Collar CFS-C P

Construction details (for symbols and abbreviations see Annex 4):

Hilti Firestop Collars CFS-C P ($A_3$) are installed on both sides of the seal, fixed together by threaded rods, washers and nuts as specified in Annex 1.2.

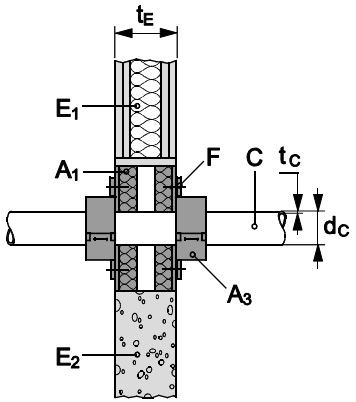


### 2.2.6.1 PVC-U pipes (C) according to EN ISO 1452-2, EN ISO 15493, DIN 8061/8062 – U/U

| Pipe diameter ($d_c$) [mm] | Pipe wall thickness $t_c$ [mm] | Collar size ($A_3$) | No. of hooks | Classification |
|---|---|---|---|---|
| 50 | 2.4 – 5.6 | CFS-C P 50/1.5” | 2 | EI 90-U/U |
| 50 | 5.6 | CFS-C P 50/1.5” | 2 | EI 120-U/U |
| 63 | 3.0 – 4.7 | CFS-C P 63/2” | 2 | EI 90-U/U |
| 75 | 2.2 – 3.6 | CFS-C P 75/2.5” | 3 | EI 90-U/U |
| 75 | 2.2 | CFS-C P 75/2.5” | 3 | EI 120-U/U |
| 90 | 2.7 – 4.3 | CFS-C P 90/3” | 3 | EI 90-U/U |
| 110 | 2.2 – 8.1 | CFS-C P 110/4” | 4 | EI 90-U/U |
| 110 | 8.1 | CFS-C P 110/4” | 4 | EI 120-U/U |
| 110 - 125 | 3.7 – 6.0 | CFS-C P 125/5” | 4 | EI 120-U/U |
| >125 – 160 | 2.5 – 11.8 | CFS-C P 160/6” | 6 | EI 120-U/U |

| The results are also valid for PVC-U pipes according EN 1329-1[9] and EN 1453-1[10] and PVC-C pipes according EN 1566-1. | | | | |
|---|---|---|---|---|
| **2.2.6.2 PE pipes (C) according to EN 1519[11] - U/U** | | | | |
| Pipe diameter ($d_c$) [mm] | Pipe wall thickness $t_c$ [mm] | Collar size ($A_3$) | No. of hooks | Classification |
| 50 | 3.0 | CFS-C P 50/1.5” | 2 | EI 90-U/U |
| 63 | 3.0 | CFS-C P 63/2” | 2 | EI 90-U/U |
| 75 | 3.0 | CFS-C P 75/2.5” | 3 | EI 90-U/U |
| 90 | 3.5 | CFS-C P 90/3” | 3 | EI 90-U/U |
| 110 | 4.2 | CFS-C P 110/4” | 4 | EI 90-U/U |
| 110 - 125 | 4.8 | CFS-C P 125/5” | 4 | EI 120-U/U |
| >125 – 160 | 6.2 | CFS-C P 160/6” | 6 | EI 120-U/U |
| The results are also valid for PE pipes according to EN 12201-2 and EN 12666-1. | | | | |
| **2.2.6.3 PE pipes (C) according to EN ISO 15494, DIN 8074/8075 – U/U** | | | | |
| Pipe diameter ($d_c$) [mm] | Pipe wall thickness $t_c$ [mm] | Collar size ($A_3$) | No. of hooks | Classification |
| 50 | 2.9 – 4.6 | CFS-C P 50/1.5” | 2 | EI 90-U/U |
| 63 | 1.8 – 5.8 | CFS-C P 63/2” | 2 | EI 90-U/U |
| 75 | 1.9 – 6.8 | CFS-C P 75/2.5” | 3 | EI 90-U/U |
| 90 | 2.2 – 8.2 | CFS-C P 90/3” | 3 | EI 90-U/U |
| 110 | 2.7 – 10.0 | CFS-C P 110/4” | 4 | EI 90-U/U |
| 110 – 125 | 3.1 – 7.1 | CFS-C P 125/5” | 4 | EI 120-U/U |
| >125 – 160 | 4.0 – 9.1 | CFS-C P 160/6” | 6 | EI 120-U/U |

9 In Germany the pipes have additionally to comply with DIN 19531-10

10 In Germany the pipes have additionally to comply with DIN 19560-10

11 In Germany the pipes have additionally to comply with DIN 19535-10

22 In Germany the pipes have additionally to comply with DIN 19535-10

**2.2.6.4 PE-S2 pipes "Geberit Silent-db20"**

Manufacturer: Geberit Int.

**2.2.6.4.1 PE-S2 pipes "Geberit Silent-db20"– U/U**

| Pipe diameter ($d_c$) [mm] | Pipe wall thickness $t_c$ [mm] | Collar size ($A_3$) | No. of hooks | Classification |
|---|---|---|---|---|
| 75 | 3.6 | CFS-C P 75/2.5" | 3 | EI 90-U/U |
| 90 | 5.5 | CFS-C P 90/3" | 3 | EI 90-U/U |
| 110 | 6.0 | CFS-C P 110/4" | 4 | EI 90-U/U |

**2.2.6.4.2 PE-S2 pipes "Geberit Silent-db20"– C/U**

| Pipe diameter ($d_c$) [mm] | Pipe wall thickness $t_c$ [mm] | Collar size ($A_3$) | No. of hooks | Classification |
|---|---|---|---|---|
| 135 | 6.0 | CFS-C P 160/6" | 6 | EI 120-C/U |
| 160 | 7.0 | CFS-C P 160/6" | 6 | EI 120-C/U |

**2.2.6.5 PE-HD 100 RC pipes "Wavin TS"– U/U**

Manufacturer: Wavin Ireland Ltd.

| Pipe diameter ($d_c$) [mm] | Pipe wall thickness $t_c$ [mm] | Collar size ($A_3$) | No. of hooks | Classification |
|---|---|---|---|---|
| 50 | 4.6 | CFS-C P 50/1.5" | 2 | EI 120-U/U |
| 75 | 6.8 | CFS-C P 75/2.5" | 3 | EI 90-U/U |
| 90 | 8.2 | CFS-C P 90/3" | 3 | EI 90-U/U |
| 110 | 10 | CFS-C P 110/4" | 4 | EI 90-U/U |

**2.2.6.6 Non-regulated PP pipes with Hilti Firestop Collar CFS-C P**

For type/manufacture: see 2.1.6

**2.2.6.6.1 PP pipes according EN 1451-1 – U/U**

| Pipe diameter ($d_c$) [mm] | Pipe wall thickness $t_c$ [mm] | Collar size ($A_3$) | No. of hooks | Classification |
|---|---|---|---|---|
| 32 | 1.8 | CFS-C P 50/1.5” | 2 | EI 90-U/U |
| 50 | 1.8 – 2.0 | CFS-C P 50/1.5” | 2 | EI 90-U/U |
| 58 | 4.0 | CFS-C P 63/2” | 2 | EI 90-U/U |
| 70 | 4.5 | CFS-C P 75/2.5” | 3 | EI 90-U/U |
| 75 | 1.9 - 2.3 | CFS-C P 75/2.5” | 3 | EI 90-U/U |
| 90 | 2.8 - 4.5 | CFS-C P 90/3” | 3 | EI 90-U/U |
| 110 | 2.7 – 5.3 | CFS-C P 110/4” | 4 | EI 90-U/U |

**2.2.6.6.2 PP pipes according EN 1451-1 – C/U**

| Pipe diameter ($d_c$) [mm] | Pipe wall thickness $t_c$ [mm] | Collar size ($A_3$) | No. of hooks | Classification |
|---|---|---|---|---|
| 125 | 3.1 – 5.3 | CFS-C P 125/5” | 4 | EI 120-C/U |
| 135 | 5.3 – 5.8 | CFS-C P 160/6” | 6 | EI 120-C/U |
| 160 | 3.9 – 7.5 | CFS-C P 160/6” | 6 | EI 120-C/U |

**2.2.6.6.3 PP pipes according EN 1451-1 – U/C**

| Pipe diameter ($d_c$) [mm] | Pipe wall thickness $t_c$ [mm] | Collar size ($A_3$) | No. of hooks | Classification |
|---|---|---|---|---|
| 78 | 4.5 | CFS-C P 75/2.5” | 3 | EI 90-U/C |

## 2.2.6.7 PP pipes according to EN ISO 15874 and/or DIN 8077/8078 with Hilti Firestop Collar CFS-C P

### 2.2.6.7.1 PP-H pipes “PROGEF standard pipe” – U/C

Manufacturer: Georg Fischer

| Pipe diameter ($d_c$) [mm] | Pipe wall thickness $t_c$ [mm] | Collar size ($A_3$) | No. of hooks | Classification |
|---|---|---|---|---|
| 50 | 4.6 | CFS-C P 50/1.5” | 2 | EI 120-U/C |
| 90 | 8.2 | CFS-C P 90/3” | 3 | EI 90-U/C |

### 2.2.6.7.2 PP-H pipes “PROGEF standard pipe” – U/U

Manufacturer: Georg Fischer

| Pipe diameter ($d_c$) [mm] | Pipe wall thickness $t_c$ [mm] | Collar size ($A_3$) | No. of hooks | Classification |
|---|---|---|---|---|
| 50 | 2.9 | CFS-C P 50/1.5” | 2 | EI 120-U/U |
| 75 | 6.8 | CFS-C P 75/2.5” | 3 | EI 90-U/U |

### 2.2.6.7.3 PP-R pipes according EN ISO 15874 – U/C

| Pipe diameter ($d_c$) [mm] | Pipe wall thickness $t_c$ [mm] | Collar size ($A_3$) | No. of hooks | Classification |
|---|---|---|---|---|
| 50 | 8.3 | CFS-C P 50/1.5” | 2 | EI 120-U/C |
| 63 | 10.5 | CFS-C P 63/2” | 3 | EI 120-U/C |
| 75 | 12.5 | CFS-C P 75/2.5” | 3 | EI 90-U/C |
| 90 | 15.0 | CFS-C P 90/3” | 3 | EI 90-U/C |

### 2.2.6.7.4 PP-H 100 pipes “Dekaprop Industry pipes” – U/U

Manufacturer: Georg Fischer

| Pipe diameter ($d_c$) [mm] | Pipe wall thickness $t_c$ [mm] | Collar size ($A_3$) | No. of hooks | Classification |
|---|---|---|---|---|
| 50 | 1.8 | CFS-C P 50/1.5” | 2 | EI 120-U/U |
| 110 | 2.7 | CFS-C P 110/4” | 4 | EI 90-U/U |

| **2.2.6.8 ABS/PUR/PE-HD pipes "Coolfit"– U/C**<br>Manufacturer: +GF+ Georg Fischer Piping Systems. | | | | |
|---|---|---|---|---|
| Pipe diameter ($d_c$) [mm] | inner pipe diameter [mm] | Collar size ($A_3$) | No. of hooks | Classification |
| 90 | 32 | CFS-C P 90/3" | 3 | EI 90-U/C |
| 110 | 40 – 50 | CFS-C P 110/4" | 4 | EI 90-U/C |

## 2.2.6.9 Special pipes with Hilti Firestop Collar CFS-C P

**2 small plastic pipes in 1 Hilti Firestop Collar CFS-C P – U/U**

Construction details:

Hilti Firestop Collars CFS-C P ($A_3$) are installed on both sides of the seal, fixed together by threaded rods, washers and nuts as specified in Annex 1.2 .

(for symbols and abbreviations see Annex 4)

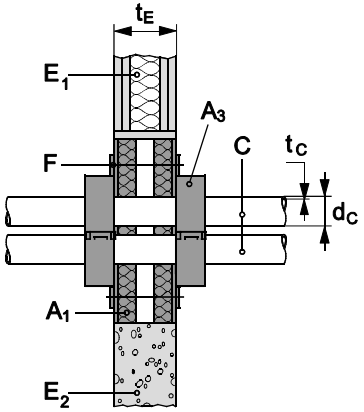


| Pipe diameter ($d_c$) [mm] | Pipe wall thickness $t_c$ [mm] | Pipe material | Pipe standard | Collar size ($A_3$) | No. of hooks | Classification |
|---|---|---|---|---|---|---|
| 20 | 1.9 / 2.8 | PE | EN ISO 15494, DIN 8074/8075 | CFS-C P 50/1.5” | 2 | EI 120-U/U |
| 20 | 1.5 / 2.2 | PVC-U | EN ISO 15493, DIN 8061/8062 | CFS-C P 50/1.5” | 2 | EI 120-U/U |
| 20 | 3.4 | PP-R | EN ISO 15874, DIN 8077/8078 | CFS-C P 50/1.5” | 2 | EI 120-U/U |
| 20 | 1.9 | PP-H | EN ISO 15874, DIN 8077/8078 | CFS-C P 50/1.5” | 2 | EI 120-U/U |

**Pipe/hose for wood pellet transport with Hilti Firestop Collar CFS-C P – U/U**

Construction details :

Hilti Firestop Collars CFS-C P ($A_3$) are installed on both sides of the seal, fixed together by threaded rods, washers and nuts as specified in Annex 1.2.

(for symbols and abbreviations see Annex 4)

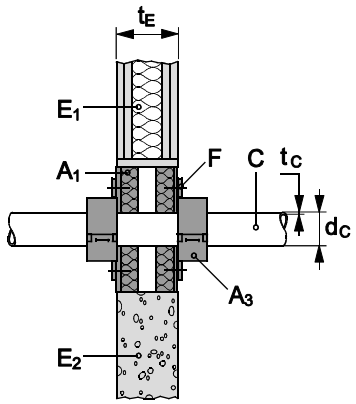


| Pipe diameter ($d_c$) [mm] | Pipe wall thickness $t_c$ [mm] | Pipe material / standard | Collar size ($A_3$) | No. of hooks | Classification |
|---|---|---|---|---|---|
| 59 | 4.0 | Pipe/hose for wood pellet transport, e.g.<br>Pelletschlauch PVC NW51 of Erich Kuhn GmbH,<br>Noviatox NW51 of Heizmann AG,<br>PVC Saug- und Druckschlauch für Holzpellets of Haberkorn GmbH,<br>RAUSPIRAFLEX pellet therm of Rehau AG,<br>Pellet-Absaugschlauch PVC Sciroppo AS of CASTAN GmbH | CFS-C P 63/2” | 3 | EI 120-U/C |

## 2.2.7 Plastic pipes with foamed elastomeric insulation according to Table 4 and Hilti Firestop Collar CFS-C P

Construction details (for symbols and abbreviations see Annex 4):

For specification of the foamed elastomeric insulation material to be used see Table 4.

Hilti Firestop Collars CFS-C P ($A_3$) are installed on both sides of the seal, fixed together by threaded rods, washers and nuts as specified in Annex 1.2.

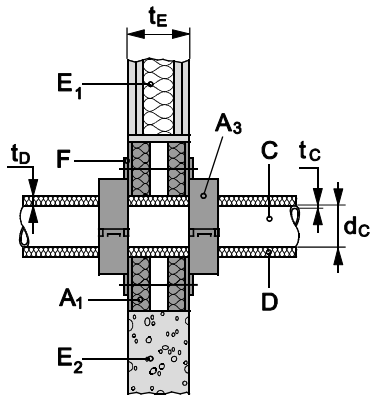


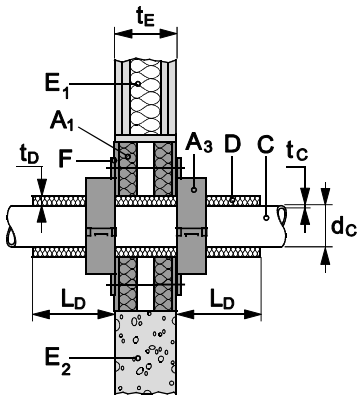


### 2.2.7.1 PE pipes (C) according to EN 1519[18] (C) with continued insulation (D) – sustained – U/U

| Pipe | | Insulation | Collar size ($A_3$) | No. of hooks | Classification |
|---|---|---|---|---|---|
| diameter ($d_c$) [mm] | wall thickness ($t_c$) [mm] | thickness ($t_D$) [mm] | | | |
| 110 | 4.2 | 25 | CFS-C P 160/6” | 4 | EI 90-U/U |

The results are also valid for PE pipes according to EN 12201-2 and EN 12666-1.

### 2.2.7.2 Special plastic Pipes (C) with continued insulation (D) – sustained – U/C

#### 2.2.7.2.1 PE-X pipes according EN ISO 15875

| Pipe | | Insulation | Collar size ($A_3$) | No. of hooks | Classification |
|---|---|---|---|---|---|
| diameter ($d_c$) [mm] | wall thickness ($t_c$) [mm] | thickness ($t_D$) [mm] | | | |
| 40 | 5.5 | 9 | CFS-C P 50/1.5” | 2 | EI 90-U/C |
| 50 | 6.9 | 9 | CFS-C P 63/2” | 2 | EI 90-U/C |
| 63 | 8.6 | 10 | CFS-C P 75/2.5” | 3 | EI 90-U/C |

**2.2.7.2.2 PP pipes "Fusiotherm SDR 11" - U/C**

Manufacturer: Aquatherm

| Pipe | | Insulation | Collar size ($A_3$) | No. of hooks | Classification |
|---|---|---|---|---|---|
| diameter ($d_c$) [mm] | wall thickness ($t_c$) [mm] | thickness ($t_D$) [mm] | | | |
| 40 | 3.7 | 9 | CFS-C P 50/1.5" | 2 | EI 120-U/C |
| 50 | 4.6 | 9 | CFS-C P 63/2" | 2 | EI 120-U/C |
| 75 | 6.8 | 10 | CFS-C P 90/3" | 3 | EI 120-U/C |
| 110 | 10.0 | 10 | CFS-C P 125/5" | 4 | EI 120-U/C |

**2.2.7.2.3 PP pipes "Fusiotherm Faser SDR 7.4/S3.2" - U/C**

Manufacturer: Aquatherm

| Pipe | | Insulation | Collar size ($A_3$) | No. of hooks | Classification |
|---|---|---|---|---|---|
| diameter ($d_c$) [mm] | wall thickness ($t_c$) [mm] | thickness ($t_D$) [mm] | | | |
| 40 | 5.5 | 9 | CFS-C P 50/1.5" | 2 | EI 120-U/C |
| 50 | 6.9 | 9 | CFS-C P 63/2" | 2 | EI 120-U/C |
| 75 | 10.3 | 10 | CFS-C P 90/3" | 3 | EI 120-U/C |
| 110 | 15.1 | 10 | CFS-C P 125/5" | 4 | EI 120-U/C |

**2.2.7.2.4 PE-100RC pipes " Wavin TS" - U/C**

Manufacturer: Wavin Ireland Ltd.

| Pipe | | Insulation | Collar size ($A_3$) | No. of hooks | Classification |
|---|---|---|---|---|---|
| diameter ($d_c$) [mm] | wall thickness ($t_c$) [mm] | thickness ($t_D$) [mm] | | | |
| 50 | 4.6 | 9 | CFS-C P 63/2" | 2 | EI 120-U/C |
| 63 | 5.8 | 10 | CFS-C P 75/2.5" | 3 | EI 120-U/C |
| 75 | 6.8 | 10 | CFS-C P 90/3" | 3 | EI 120-U/C |
| 90 | 8.2 | 10 | CFS-C P 110/4" | 4 | EI 120-U/C |
| 110 | 10.0 | 10 | CFS-C P 125/5" | 4 | EI 120-U/C |

| 2.2.7.2.5 PVC-C pipes "Friatherm starr", Manufacturer: Friatec | | | | | |
|---|---|---|---|---|---|
| Pipe | | Insulation | Collar size ($A_3$) | No. of hooks | Classification |
| diameter ($d_c$) [mm] | wall thickness ($t_c$) [mm] | thickness ($t_D$) [mm] | | | |
| 32 | 3.6 | 9 | CFS-C P 50/1.5" | 2 | EI 120-U/C |
| 40 | 4.5 | 9 | CFS-C P 63/2" | 2 | EI 120-U/C |
| 50 | 5.6 | 9 | CFS-C P 63/2" | 2 | EI 120-U/C |
| 63 | 7.1 | 10 | CFS-C P 75/2.5" | 3 | EI 120-U/C |
| **2.2.7.3 PE pipes (C) according to EN 1519[18] (C) with continued insulation (D) – interrupted – U/U** | | | | | |
| Pipe | | Insulation | Collar size ($A_3$) | No. of hooks | Classification |
| diameter ($d_c$) [mm] | wall thickness ($t_c$) [mm] | thickness ($t_D$) [mm] | | | |
| 110 | 4.2 | 10 | CFS-C P 160/6" | 4 | EI 90-U/U |
| The results are also valid for PE pipes according to EN 12201-2 and EN 12666-1. | | | | | |

| 2.2.7.4 Pipes (C) with local insulation (D) – sustained – U/C | | | | | | |
|---|---|---|---|---|---|---|
| **2.2.7.4.1 PE-X pipes according EN ISO 15875** | | | | | | |
| Pipe | | Insulation | | Collar size ($A_3$) | No. of hooks | Classification |
| diameter ($d_c$) [mm] | wall thickness ($t_c$) [mm] | thickness ($t_D$) [mm] | length ($L_D$) [mm] | | | |
| 40 | 5.5 | 9 | ≥250 | CFS-C P 50/1.5" | 2 | EI 90-U/C |
| 50 | 6.9 | 9 | ≥250 | CFS-C P 63/2" | 2 | EI 90-U/C |
| 63 | 8.6 | 10 | ≥250 | CFS-C P 75/3" | 3 | EI 90-U/C |

**2.2.7.4.2 PP pipes “Fusiotherm SDR 11”**

Manufacturer: Aquatherm

| Pipe | | Insulation | | Collar size ($A_3$) | No. of hooks | Classification |
|---|---|---|---|---|---|---|
| diameter ($d_c$) [mm] | wall thickness ($t_c$) [mm] | thickness ($t_D$) [mm] | length ($L_D$) [mm] | | | |
| 40 | 3.7 | 9 | ≥200 | CFS-C P 50/1.5” | 2 | EI 120-U/C |
| 50 | 4.6 | 9 | ≥200 | CFS-C P 63/2” | 2 | EI 120-U/C |
| 75 | 6.8 | 10 | ≥200 | CFS-C P 90/3” | 3 | EI 120-U/C |
| 110 | 10.0 | 10 | ≥200 | CFS-C P 125/5” | 4 | EI 120-U/C |

**2.2.7.4.3 PP pipes “Fusiotherm Faser SDR 7.4/S3.2”**

Manufacturer: Aquatherm

| Pipe | | Insulation | | Collar size ($A_3$) | No. of hooks | Classification |
|---|---|---|---|---|---|---|
| diameter ($d_c$) [mm] | wall thickness ($t_c$) [mm] | thickness ($t_D$) [mm] | length ($L_D$) [mm] | | | |
| 40 | 5.5 | 9 | ≥200 | CFS-C P 50/1.5” | 2 | EI 120-U/C |
| 50 | 6.9 | 9 | ≥200 | CFS-C P 63/2” | 2 | EI 120-U/C |
| 75 | 10.3 | 10 | ≥200 | CFS-C P 90/3” | 3 | EI 120-U/C |
| 110 | 15.1 | 10 | ≥200 | CFS-C P 125/5” | 4 | EI 120-U/C |

**2.2.7.4.4 PE-100RC pipes “Wavin TS”**

Manufacturer: Wavin

| Pipe | | Insulation | | Collar size ($A_3$) | No. of hooks | Classification |
|---|---|---|---|---|---|---|
| diameter ($d_c$) [mm] | wall thickness ($t_c$) [mm] | thickness ($t_D$) [mm] | length ($L_D$) [mm] | | | |
| 50 | 4.6 | 9 | ≥200 | CFS-C P 63/2” | 2 | EI 120-U/C |
| 63 | 5.8 | 10 | ≥200 | CFS-C P 75/2.5” | 3 | EI 120-U/C |
| 75 | 6.8 | 10 | ≥200 | CFS-C P 90/3” | 3 | EI 120-U/C |
| 90 | 8.2 | 10 | ≥200 | CFS-C P 110/4” | 4 | EI 120-U/C |
| 110 | 10.0 | 10 | ≥200 | CFS-C P 125/5” | 4 | EI 120-U/C |

**2.2.7.4.5 PVC-C pipes "Friatherm starr"**
Manufacturer: Friatec

| Pipe | | Insulation | | Collar size ($A_3$) | No. of hooks | Classification |
|---|---|---|---|---|---|---|
| diameter ($d_c$) [mm] | wall thickness ($t_c$) [mm] | thickness ($t_D$) [mm] | length ($L_D$) [mm] | | | |
| 32 | 3.6 | 9 | ≥200 | CFS-C P 50/1.5" | 2 | EI 120-U/C |
| 40 | 4.5 | 9 | ≥200 | CFS-C P 63/2" | 2 | EI 120-U/C |
| 50 | 5.6 | 9 | ≥200 | CFS-C P 63/2" | 2 | EI 120-U/C |
| 63 | 7.1 | 10 | ≥200 | CFS-C P 75/2.5" | 3 | EI 120-U/C |

## 2.2.8 Plastic pipes with Hilti Firestop Collar CFS-C

Construction details (for symbols and abbreviations see Annex 4):

Hilti Firestop Collars CFS-C ($A_3$) are installed on both sides of the seal, fixed together by threaded rods, washers and nuts as specified in Annex 1.2.

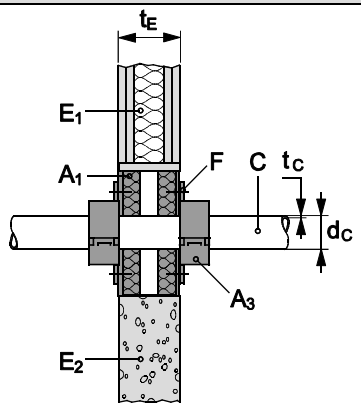


**2.2.8.1 PVC-U pipes (C) according to EN ISO 1452-2, EN ISO 15493, DIN 8061/8062**

| Pipe diameter ($d_c$) [mm] | Pipe wall thickness ($t_{c1}$) [mm] | Collar size ($A_3$) | No. of hooks | Classification |
|---|---|---|---|---|
| 50 | 2.4 – 5.6 | CFS-C 50/1.5" | 2 | EI 120-U/C |
| 63 | 3.0 – 4.7 | CFS-C 63/2" | 2 | EI 120-U/C |
| 75 | 2.2 – 3.6 | CFS-C 75/2.5" | 3 | EI 120-U/C |
| 90 | 2.7 – 4.3 | CFS-C 90/3" | 3 | EI 120-U/C |
| 110 | 1.8 – 8.1 | CFS-C 110/4" | 4 | EI 120-U/C |
| 125 | 3.7 – 6.0 | CFS-C 125/5" | 4 | EI 120-U/C |
| 160 | 2.5 – 11.8 | CFS-C 160/6" | 4 | EI 120-U/C |
| The results are also valid for PVC-U pipes according EN 1329-1[16] and EN 1453-1[17] as well as PVC-C pipes according EN 1566-1 | | | | |

| 2.2.8.2 PE pipes (C) according to EN ISO 15494, DIN 8074/8075 | | | | |
|---|---|---|---|---|
| Pipe diameter ($d_c$) [mm] | Pipe wall thickness $t_c$ [mm] | Collar size ($A_3$) | No. of hooks | Classification |
| 50 | 2.9 – 4.6 | CFS-C 50/1.5” | 2 | EI 120-U/C |
| 63 | 1.8 – 5.8 | CFS-C 63/2” | 2 | EI 120-U/C |
| 75 | 1.9 – 6.8 | CFS-C 75/2.5” | 3 | EI 120-U/C |
| 90 | 2.2 - 8.2 | CFS-C 90/3” | 3 | EI 120-U/C |
| 110 | 2.7 – 10.0 | CFS-C 110/4” | 4 | EI 120-U/C |
| 125 | 3.1 – 7.1 | CFS-C 125/5” | 4 | EI 120-U/C |
| 160 | 4.0 – 9.1 | CFS-C 160/6” | 4 | EI 120-U/C |
| **2.2.8.3 PE pipes (C) according to EN 1519**[18] | | | | |
| Pipe diameter ($d_c$) [mm] | Pipe wall thickness $t_c$ [mm] | Collar size ($A_3$) | No. of hooks | Classification |
| 50 | 3.0 | CFS-C 50/1.5” | 2 | EI 120-U/C |
| 63 | 3.0 | CFS-C 63/2” | 2 | EI 120-U/C |
| 75 | 3.0 | CFS-C 75/2.5” | 3 | EI 120-U/C |
| 90 | 3.5 | CFS-C 90/3” | 3 | EI 120-U/C |
| 110 | 4.2 | CFS-C 110/4” | 4 | EI 120-U/C |
| 125 | 4.8 | CFS-C 125/5” | 4 | EI 120-U/C |
| 160 | 6.2 | CFS-C 160/6” | 4 | EI 120-U/C |
| The results are also valid for PE pipes according to EN 12201-2 and EN 12666-1. | | | | |

## 2.2.9 Plastic pipes with Hilti Firestop Collar Endless CFS-C EL

Construction details (for symbols and abbreviations see Annex 4):

Hilti Firestop Collar Endless CFS-C EL has to be installed around the pipe on each side of the wall.

Wall type:

- Flexible, fire rated wall acc.2.1a), minimum thickness 100mm
- Rigid, fire rated wall acc.2.1b), minimum thickness 100mm

Hilti Firestop Collar Endless CFS-C EL should be fixed in mineral wool boards using Threaded rods minimum M6 with flat washer and nut, penetrating the boards.

Pipes have to be grouped in lines only; number of pipes in line is not limited.

Minimum distances

- between pipes in single penetration: ≥ 200mm
- between pipes in one line: ≥ 80mm
- between two lines of pipes: ≥ 200mm
- between pipe and building element ≥ 0mm

Gap sealing (board to building element and board to penetrating pipe) should be done with CFS-S ACR. Coated Boards have to be installed flush with wall surface. If the wall thickness is bigger than 100mm the free space between both boards has to be closed around penetrating plastic pipes with mineral wool, at least 100mm around the plastic pipes. Pipes could be covered with a sound decoupling insulation, penetrating the wall and all installed jackets CFS-C EL in LS and CS situation. Sound decoupling insulation comprise a max.9mm polyethylene based insulation or a max. 4mm Polyesther insulation (*Thermaflex, ThermoVließ B2)*

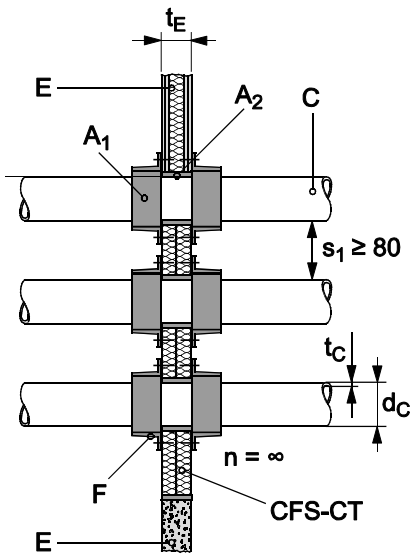


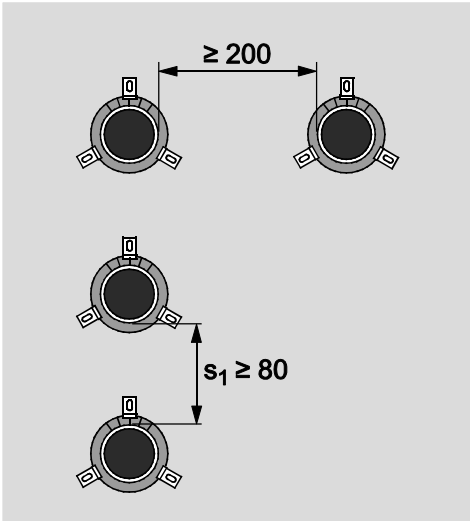

### 2.2.9.1 Plastic pipes acc. EN 1519-1, EN 12666-1, EN 12201-2 and ABS-pipes acc. EN 1455-1 and SAN+PVC-pipes acc. EN 1565-1

| | |
|---|---|
| 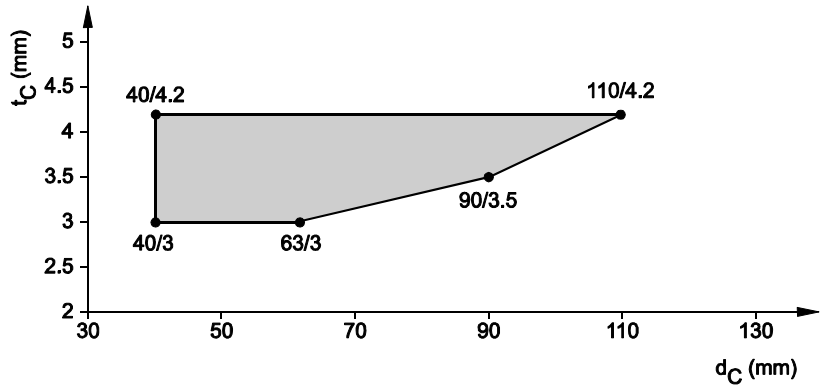 | Approved pipe range for EI 90-U/U,<br>penetrating Hilti Firestop Boards CFS-CT B 1S in flexible or rigid walls ($t_E$ > 100mm), see 2.1a, sealed with Hilti Firestop Collar CFS-C EL |

### 2.2.9.2 ABS- pipes acc. EN 1455, EN 15493 and SAN+PVC-pipes acc. EN 1565-1, penetrating Hilti Firestop Boards CFS-CT B 1S

| | |
|---|---|
| 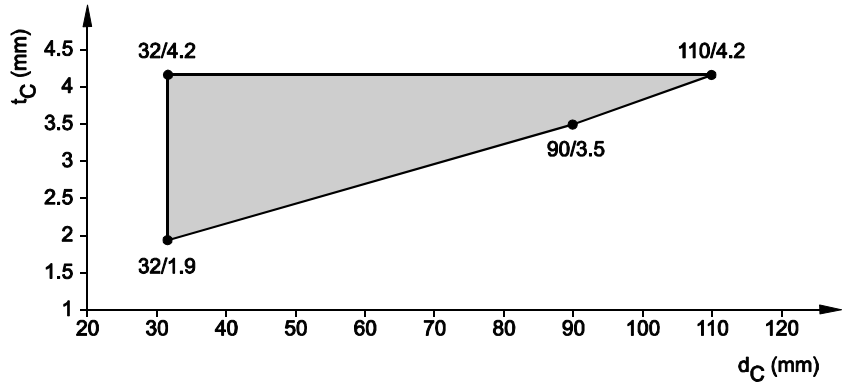 | Approved pipe range for EI 90-U/U,<br>penetrating Hilti Firestop Boards CFS-CT B 1S in flexible or rigid walls ($t_E$ > 100mm) see 2.1a, sealed with Hilti Firestop Collar CFS-C EL |

### 2.2.9.3 PE pipes acc. EN15494, EN12201-2 and DIN 8074/75

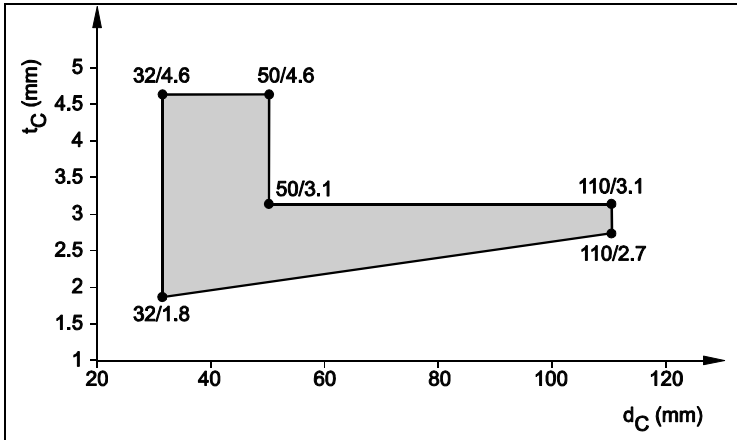


Approved pipe range for EI90-U/U,

penetrating Hilti Firestop Boards CFS-CT B 1S in flexible or rigid walls ($t_E$ > 100mm), see 2.1.a), sealed with Hilti Firestop Collar CFS-C EL

### 2.2.9.4 PVC pipes acc. EN 1452-1, EN 1329-1, EN 1453-1, EN 1566-1, EN ISO 15493 and DIN 8061/62

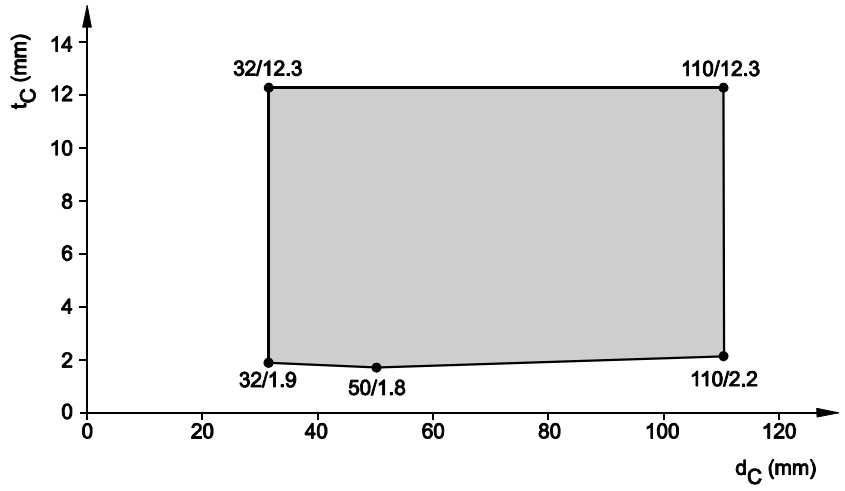


Approved pipe range for EI90-U/U,

penetrating Hilti Firestop Boards CFS-CT B 1S in flexible or rigid walls ($t_E$ > 100mm), see 2.1.a), sealed with Hilti Firestop Collar CFS-C EL

### 2.2.9.5 PP pipes, non-regulated

For appoved pipe type/manufacturer refer to 2.1.6.

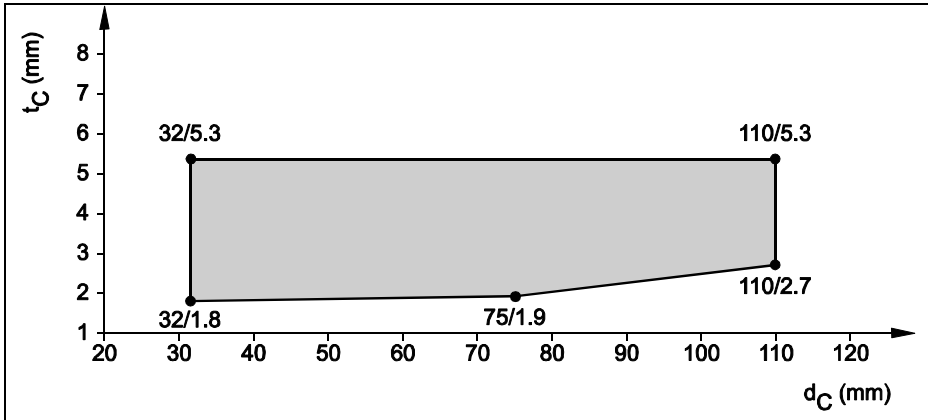


Approved pipe range for EI90-U/U,

penetrating Hilti Firestop Boards CFS-CT B 1S in flexible or rigid walls ($t_E$ > 100mm), see 2.1.a), sealed with Hilti Firestop Collar CFS-C EL

The following types of mineral reinforced non-regulated PP-pipes are approved:

Coes Blue Power, Coes PhoNo Fire, Geberit Silent PP,Marley Silent, Ostendorf Skolan db, Pipelife Master 3, Poloplast Polokal NG, Poloplast Polokal 3S, Poloplast Polokal XS, Rehau Raupiano Plus, KE KELIT PhonEx AS, Valsir Triplus, Valsir Silere, Wavin SiTech, Wavin AS

### 2.2.9.6 PP pipes acc. EN1451-1 and DIN 8077/78

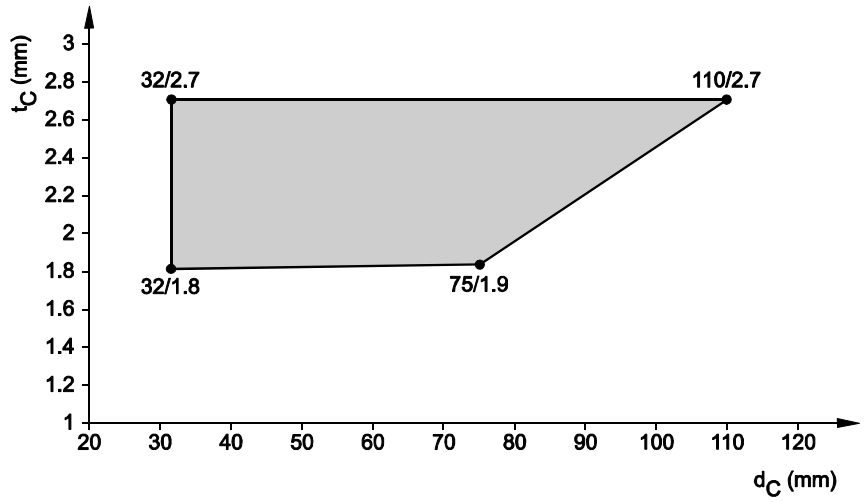


Approved pipe range for EI90-U/U,

penetrating Hilti Firestop Boards CFS-CT B 1S in flexible or rigid walls ($t_E$ > 100mm), see 2.1.a), sealed with Hilti Firestop Collar CFS-C EL

### 2.2.9.7 PE pipes, non-regulated (Geberit Silent dB20)

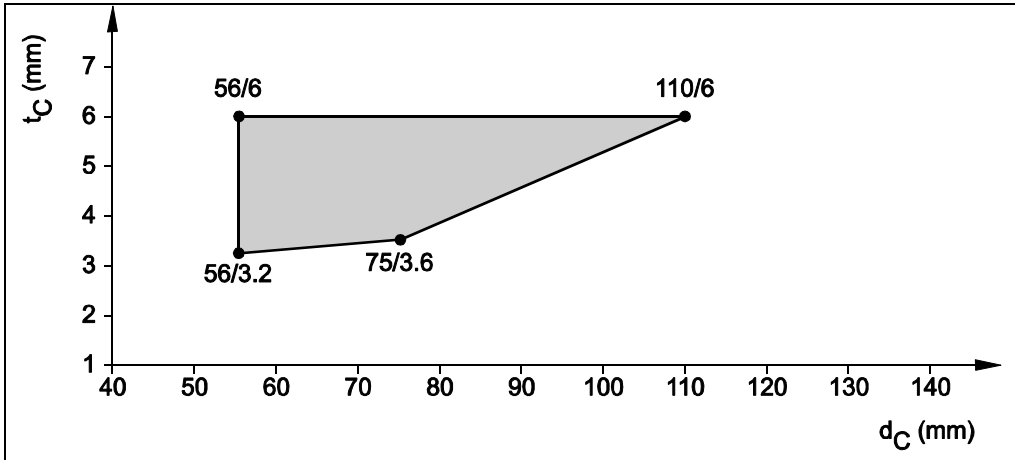


Approved pipe range for EI90-U/U,

penetrating Hilti Firestop Boards CFS-CT B 1S in flexible or rigid walls ($t_E$ > 100mm), see 2.1.a), sealed with Hilti Firestop Collar CFS-C EL

## 2.2.10 Plastic pipes with Hilti Firestop Wrap CFS-W

Construction details (for symbols and abbreviations see Annex 4):

Hilti Firestop Wrap CFS-W EL or SG ($A_4$) is wrapped around the pipe on each side of the seal and positioned within the annular gap so that the outer edge of the wrap is flush with the surface of the wall as specified in Annex 1.2.

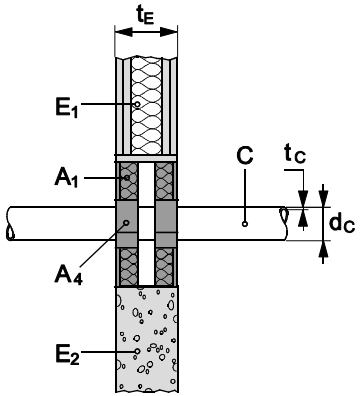


### 2.2.10.1 PVC-U pipes (C) according to EN ISO 1452-2, EN ISO 15493, DIN 8061/8062 – U/C

| Pipe diameter ($d_c$) [mm] | Pipe wall thickness $t_c$ [mm] | Wrap type ($A_4$) | Size (CFS-W SG) No. of layers (CFS-W EL) | Classification |
|---|---|---|---|---|
| 50 | 2.2 – 3.6 | CFS-W SG | 50/1.5” | EI 90-U/C |
| 63 | 2.2 – 3.6 | CFS-W SG | 63/2” | EI 90-U/C |
| 75 | 2.2 – 3.6 | CFS-W SG | 75/2.5” | EI 90-U/C |
| ≤ 75 | 2.2 – 3.6 | CFS-W EL | 1 | EI 90-U/C |
| 90 | 3.7 – 6.0 | CFS-W SG | 90/3” | EI 90-U/C |
| 110 | 3.7 – 6.0 | CFS-W SG | 110/4” | EI 90-U/C |
| 125 | 3.7 – 6.0 | CFS-W SG | 125/5” | EI 90-U/C |
| >75 ≤ 125 | 3.7 – 6.0 | CFS-W EL | 2 | EI 90-U/C |

The results are also valid for PVC-U pipes according EN 1329-1[16] and EN 1453-1[17] and PVC-C pipes according EN 1566-1.

### 2.2.10.2 PE pipes (C) according to EN 151918 - U/C

| Pipe diameter ($d_c$) [mm] | Pipe wall thickness $t_c$ [mm] | Wrap type ($A_4$) | Size (CFS-W SG) No. of layers (CFS-W EL) | Classification |
|---|---|---|---|---|
| 50 | 3.0 | CFS-W SG | 50/1.5” | EI 90-U/C |

| | | | | |
|---|---|---|---|---|
| 63 | 3.0 | CFS-W SG | 63/2” | EI 90-U/C |
| 75 | 3.0 | CFS-W SG | 75/2.5” | EI 90-U/C |
| ≤ 75 | 3.0 | CFS-W EL | 1 | EI 90-U/C |
| 90 | 4.8 | CFS-W SG | 90/3” | EI 90-U/C |
| 110 | 4.8 | CFS-W SG | 110/4” | EI 90-U/C |
| 125 | 4.8 | CFS-W SG | 125/5” | EI 90-U/C |
| >75 ≤ 125 | 4.8 | CFS-W EL | 2 | EI 90-U/C |
| The results are also valid for PE pipes according to EN 12201-2 and EN 12666-1. | | | | |
| **2.2.10.3 PE pipes (C) according to EN ISO 15494, DIN 8074/8075 – U/C** | | | | |
| Pipe diameter ($d_c$) [mm] | Pipe wall thickness $t_c$ [mm] | Wrap type ($A_4$) | Size (CFS-W SG)<br>No. of layers (CFS-W EL) | Classification |
| 50 | 1.9 – 6.8 | CFS-W SG | 50/1.5” | EI 90-U/C |
| 63 | 1.9 – 6.8 | CFS-W SG | 63/2” | EI 90-U/C |
| 75 | 1.9 – 6.8 | CFS-W SG | 75/2.5” | EI 90-U/C |
| ≤ 75 | 1.9 – 6.8 | CFS-W EL | 1 | EI 90-U/C |
| 90 | 3.2 – 7.1 | CFS-W SG | 90/3” | EI 90-U/C |
| 110 | 3.2 – 7.1 | CFS-W SG | 110/4” | EI 90-U/C |
| 125 | 3.2 – 7.1 | CFS-W SG | 125/5” | EI 90-U/C |
| >75 ≤ 125 | 3.2 – 7.1 | CFS-W EL | 2 | EI 90-U/C |
| **2.2.10.4 PP pipes (C) “Wavin AS” or “Phonex AS” – C/U<br>Manufacturer: Wavin Ltd. or KeKelit** | | | | |
| Pipe diameter ($d_c$) [mm] | Pipe wall thickness $t_c$ [mm] | Wrap type ($A_4$) | No. of layers (CFS-W EL) | Classification |
| ≤78 | 4.5 | CFS-W EL | 1 | EI 120-C/U |
| **2.2.10.5 PP pipes (C) “Raupiano plus” – C/U<br>Manufacturer: Rehau** | | | | |
| Pipe diameter ($d_c$) [mm] | Pipe wall thickness $t_c$ [mm] | Wrap type ($A_4$) | No. of layers (CFS-W EL) | Classification |
| ≤75 | 1.9 | CFS-W EL | 1 | EI 120-C/U |

| **2.2.10.6 PE-S2 pipes (C) "Geberit Silent db20"<br>Manufacturer: Geberit** | | | | |
|---|---|---|---|---|
| Pipe diameter ($d_c$) [mm] | Pipe wall thickness $t_c$ [mm] | Wrap type ($A_4$) | No. of layers (CFS-W EL) | Classification |
| ≤75 | 3.6 | CFS-W EL | 1 | EI 120-C/U |

## 2.2.11 Al-Composite pipes with foamed elastomeric insulation according to Table 4 and Hilti Firestop Collar CFS-C P

Construction details (for symbols and abbreviations see Annex 4):

For specification of the foamed elastomeric insulation material to be used see Table 4.

Hilti Firestop Collars CFS-C P ($A_3$) are installed on both sides of the seal, fixed together by threaded rods, washers and nuts as specified in Annex 1.2.

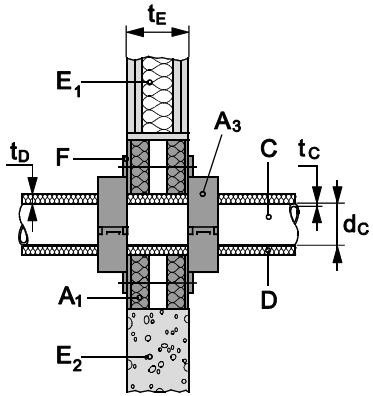


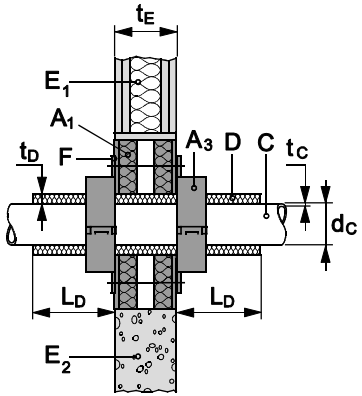


### 2.2.11.1 Pipes (C) with continued insulation (D) – sustained – U/C

**PE-Xb/Al/PE-HD "Geberit Mepla"**

Manufacturer: Geberit

| Pipe | | Insulation | Collar size ($A_3$) | No. of hooks | Classification |
|---|---|---|---|---|---|
| diameter ($d_c$) [mm] | wall thickness ($t_c$) [mm] | thickness ($t_D$) [mm] | | | |
| 40 | 3.5 | 9 | CFS-C P 50/1.5" | 2 | EI 60-U/C |
| 50 | 4.0 | 9 | CFS-C P 63/2" | 2 | EI 60-U/C |

**PE-Xa/Al/PE-HD "Rautitan stabil"**

Manufacturer: Rehau

| Pipe | | Insulation thickness ($t_D$) [mm] | Collar size ($A_3$) | No. of hooks | Classification |
|---|---|---|---|---|---|
| diameter ($d_c$) [mm] | wall thickness ($t_c$) [mm] | | | | |
| 40 | 6.0 | 9 | CFS-C P 50/1.5" | 2 | EI 60-U/C |

| **PE-X/Al/PE "KELOX KM 110"**<br>Manufacturer: KeKelit Kunststoffwerk | | | | | |
|---|---|---|---|---|---|
| Pipe | | Insulation thickness ($t_D$) [mm] | Collar size ($A_3$) | No. of hooks | Classification |
| diameter ($d_c$) [mm] | wall thickness ($t_c$) [mm] | | | | |
| 50 | 4.5 | 9 | CFS-C P 50/1.5” | 2 | EI 60-U/C |
| 63 | 6.0 | 9 | CFS-C P 75/2.5” | 3 | EI 60-U/C |

## 2.2.12 Al-Composite pipes with foamed elastomeric insulation according Table 4 and Hilti Firestop Bandage CFS-B

Construction details (for symbols and abbreviations see Annex 4):

For specification of the foamed elastomeric insulation material to be used see Table 4.

Two layers of Firestop Bandage CFS-B ($A_2$) wrapped around the pipe insulation, on each side of the seal. The bandage is positioned with half of its width (62.5 mm) within the seal (central marking line at the surface of the seal) and outside the seal fixed with wire.

Over of the bandage/pipe insulation additional protection $AP_6$ or $AP_7$ according to 1.2 is installed:

$AP_6$: Armaflex AF19 pipe insulation wrapped around the bandage/pipe insulation on each side of the seal, fixed with wire, length ($L_{AP}$) = 300 mm on each side, thickness ($t_{AP}$) = 19 mm.

$AP_7$: Mineral wool mat according to Table 2, wrapped around the bandage/pipe insulation on each side of the seal, fixed with wire, length ($L_{AP}$) = 300 mm, thickness ($t_{AP}$) = 20 mm.

Continued insulation, sustained (CS)

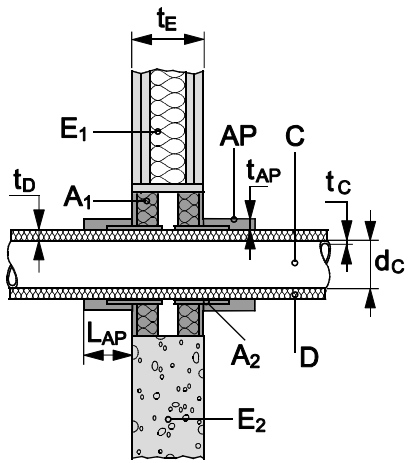


Local insulation, sustained (LS)

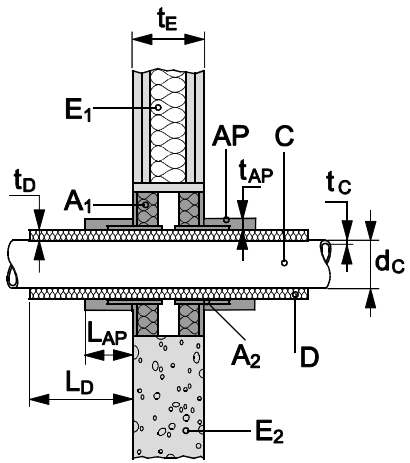

| 2.2.12.1 Al-composite pipes (C) with continued insulation (D) – sustained – U/C | | | | |
|---|---|---|---|---|
| **PE-Xb/Al/PE-HD pipes „Geberit Mepla“**<br>Manufacturer: Geberit | | | | |
| Pipe | | Insulation | Additional protection | Classification |
| diameter ($d_C$) [mm] | wall thickness ($t_C$) [mm] | thickness (tD) [mm] | | |
| 16 | 2.25 | 10 - 32 | $AP_6$ | EI 120-U/C |
| 26 - 63 | 3.0 - 4.5 | 10 - 32 | $AP_6$ | EI 120-U/C |
| 16 | 2.25 | 10 - 32 | $AP_7$ | EI 90-U/C |
| 32 | 3.0 | 10 - 32 | $AP_7$ | EI 90-U/C |
| 40 - 63 | 3.5 - 4.5 | 10 - 32 | $AP_7$ | EI 120-U/C |
| 32 | 3.0 | 32 | $AP_7$ | EI 120-U/C |

| 2.2.12.2 Al-composite pipes (C) with local insulation (D) – sustained – U/C | | | | | |
|---|---|---|---|---|---|
| **PE-Xb/Al/PE-HD pipes „Geberit Mepla“**<br>Manufacturer: Geberit | | | | | |
| Pipe | | Insulation | | Additional protection | Classification |
| diameter ($d_C$) [mm] | wall thickness ($t_C$) [mm] | thickness ($t_D$) [mm] | length ($L_D$) [mm] | | |
| 16 | 2.25 | 10 - 32 | ≥ 450 | $AP_6$ | EI 120-U/C |
| 26 - 63 | 3.0 - 4.5 | 10 - 32 | ≥ 450 | $AP_6$ | EI 120-U/C |
| 16 | 2.25 | 10 - 32 | ≥ 450 | $AP_7$ | EI 90-U/C |
| 32 | 3.0 | 10 - 32 | ≥ 450 | $AP_7$ | EI 90-U/C |
| 40 - 63 | 3.5 - 4.5 | 10 - 32 | ≥ 450 | $AP_7$ | EI 120-U/C |
| 32 | 3.0 | 32 | ≥ 450 | $AP_7$ | EI 120-U/C |

## 2.2.13 Al-composite pipes with mineral wool insulation according to Table 3

Construction details (for symbols and abbreviations see Annex 4):

Continued insulation, sustained (CS)

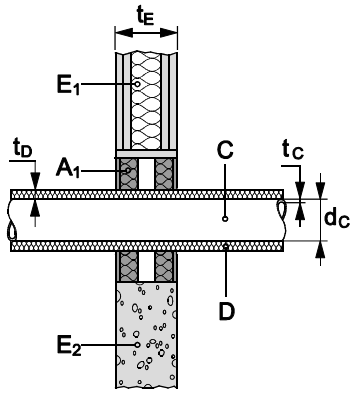


Local insulation, sustained (LS)

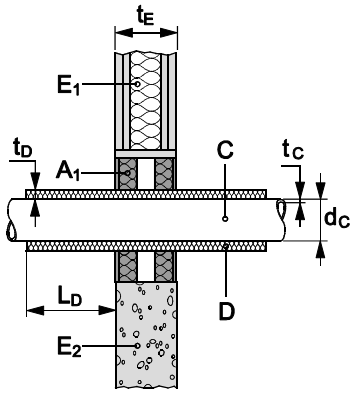


### 2.2.13.1 Pipes (C) with continued insulation (D) – sustained – U/C

**PE-Xb/Al/PE-HD pipes „Geberit Mepla“**

Manufacturer: Geberit

| Pipe diameter ($d_C$) [mm] | Pipe wall thickness ($t_C$) [mm] | Insulation thickness ($t_D$) [mm] | Classification |
|---|---|---|---|
| 16 - 32 | 2.0 – 3.0 | ≥ 20 | EI 120-U/C |

**VPE/Al/VPE pipes „Kelox KM 110“**

Manufacturer: KeKelit

| Pipe diameter ($d_C$) [mm] | Pipe wall thickness ($t_C$) [mm] | Insulation thickness ($t_D$) [mm] | Classification |
|---|---|---|---|
| 16 - 32 | 2.0 – 3.0 | ≥ 20 | EI 120-U/C |
| 16.2 - 32 | 2.6 – 4.7 | ≥ 20 | EI 120-U/C |

| 2.2.13.2 Pipes (C) with local insulation (D) – sustained – U/C | | | | |
|---|---|---|---|---|
| **PE-Xb/Al/PE-HD pipes „Geberit Mepla“**<br>Manufacturer: Geberit | | | | |
| Pipe | | Insulation | | Classification |
| diameter ($d_C$) [mm] | wall thickness ($t_C$) [mm] | thickness ($t_D$) [mm] | length ($L_D$) [mm] | |
| 16 - 32 | 2.0 – 3.0 | 20 | ≥ 250 | EI 120-U/C |
| **VPE/Al/VPE pipes „Kelox KM 110“**<br>Manufacturer: KeKelit | | | | |
| Pipe | | Insulation | | Classification |
| diameter ($d_C$) [mm] | wall thickness ($t_C$) [mm] | thickness ($t_D$) [mm] | length ($L_D$) [mm] | |
| 16 - 32 | 2.0 – 3.0 | 20 | ≥ 250 | EI 120-U/C |
| **PE-Xa/Al/PE-HD pipes „Rautitan stabil“**<br>Manufacturer: Rehau | | | | |
| Pipe | | Insulation | | Classification |
| diameter ($d_C$) [mm] | wall thickness ($t_C$) [mm] | thickness ($t_D$) [mm] | length ($L_D$) [mm] | |
| 16.2 - 32 | 2.6 – 4.7 | 20 | ≥ 250 | EI 120-U/C |

| 2.2.14 **Plastic pipes with Hilti Firestop Wrap CFS-W P** |
| --- |
| Construction details (for symbols and abbreviations see Annex 4): |

**Flexible walls acc.2.1a):** The wall must have a minimum thickness of 100 mm and comprise timber or steel studs covered on both faces with minimum 2 layers of 12,5 mm thick boards. A higher number of board layers are accepted if the overall board layer thickness is equal or bigger than tested. A higher overall board layer thickness is accepted, if the number of board layers is equal or bigger than tested.

For timber stud walls there must be a minimum distance of 100 mm of the seal to any stud and the cavity between stud and seal must be closed. A minimum 100 mm insulation of Class A1 or A2 (in accordance with EN 13501-1) has to remain in the cavity between stud and seal. In steel stud construction the space between linings has not to be completely filled with insulation material, especially in the neighbourhood to the seal. Nevertheless the wall construction has to be set up according requirements given in EN 1366-3:2009 or the construction itself has been classified according EN 13501-2. An aperture framing inside the wall is not required.

**Rigid wall:** The wall must have a minimum thickness 100 mm and comprise concrete, aerated concrete or masonry, having a mininum density of 650 kg/m$^3$, se point 2.1.

Hilti Firestop Wrap CFS-W P is a graphite based strip with a width of 50mm and a thickness of 2mm. Used length depends from pipe diameter, pipe insulation and construction group (CG).

No Z-profiles have to be used in wall application of CFS-W P.

The boards are placed into the opening of the wall construction in a way that the visible sites are installed flush with wall surface. In case of a thicker wall (> 100mm) the penetrants should be wrapped in between both boards with mineral wool (refer to Annex 2, 2.1.3,AP9).

The pipes may only be installed horizontal, perpendicular to the penetration seal. Distance from wall surface to nearest pipe support position is equal to or smaller than 250mm.

Hilti Firestop Wrap CFS-W P ($A_1$) to be mounted on both sides of the Hilti Firestop Double Board Seal CFS-CT. Annular gap between the pipe sealing and the double board sealed with Hilti Firestop Acrylic Sealant CFS-S ACR – material ($A_2$): water based acrylic sealant. The wrap comes 5 mm further than the board surface on both sides of the wall.

## 2.2.14.1 Plastic pipes, sealed with Hilti Firestop Wrap CFS-W P – seal design variations in wall

| Seal design type | | Sealing product ($A_1$) | | Annular sealing ($A_2$) | Principle drawings |
|---|---|---|---|---|---|
| i) | Uninsulated Plastic Pipe | CFS-W P | Standard number of layers | Acrylic sealant CFS-S ACR | 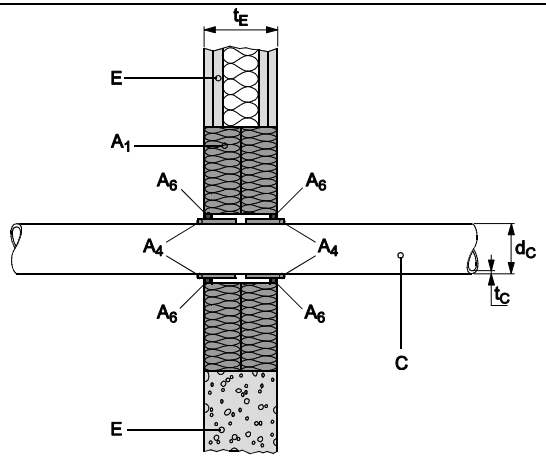 |
| ii) | Insulated (CS) Plastic Pipe | CFS-W P | Standard number of layers | Acrylic sealant CFS-S ACR | 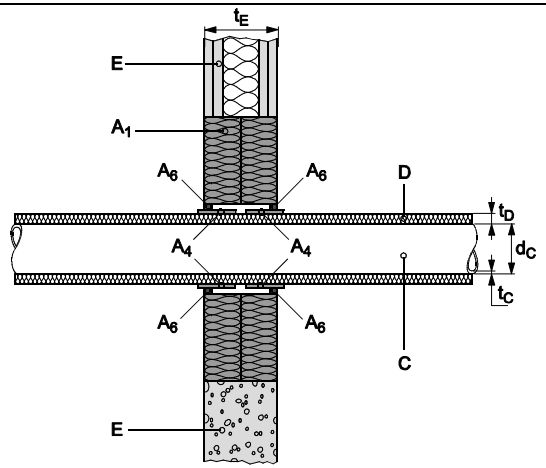 |

| | | | | | |
|---|---|---|---|---|---|
| **iii)** | Insulated (CS) Aluminium composite Pipe, elastomeric foamed insulation (see ann.2.2.11.2) | CFS-W P | Standard number of layers | Acrylic sealant CFS-S ACR | 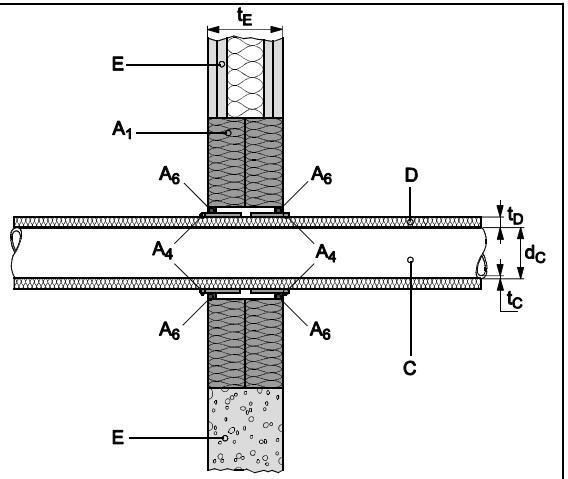 |
| **iv)** | Insulated (CS) Metal Pipe with add. protection $D_1$* ($l_{D1}$=50 mm),<br>elastomeric foamed insulation (see ann.2.2.11.2) | CFS-W P | Standard number of layers | Acrylic sealant CFS-S ACR | 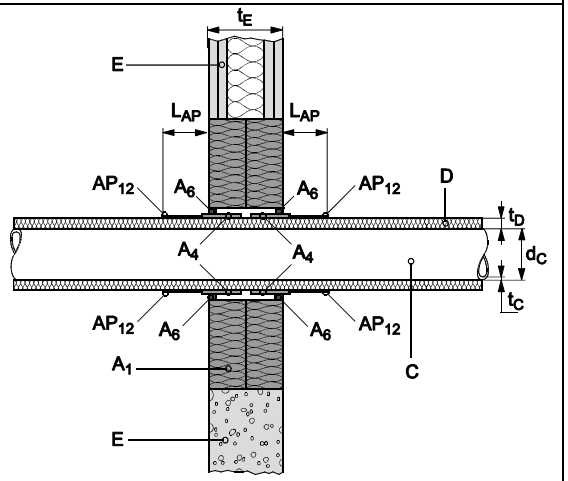 |

| | | | | | |
|---|---|---|---|---|---|
| **v)** | Insulated (CS) Metal Pipe with add. protection $D_2$** ($l_{D2}$=200 mm),<br><br>elastomeric foamed insulation (see ann.2.2.11.2) | CFS-W P | Standard number of layers | Acrylic sealant CFS-S ACR | 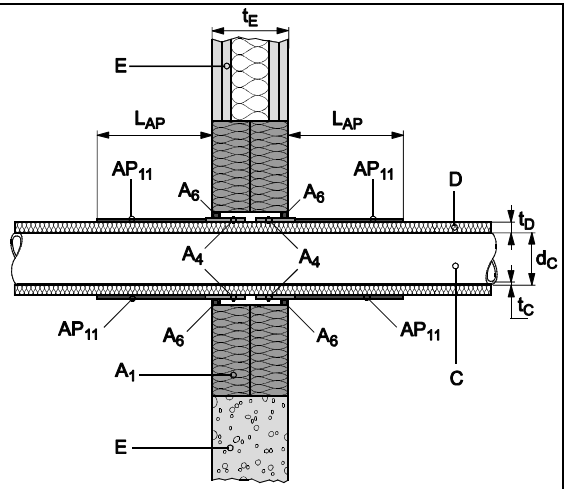 |

* $D_1$ is an elastomeric adhesive tape, thickness 3mm, wrapped around the elastomeric pipe insulation in a length of 50mm

** $D_2$ is an elastomeric adhesive PE based duct tape, wrapped around the elastomeric pipe insulation in a length of 200mm

### 2.2.14.2 Foamed elastomeric insulation

The following types of foamed elastomeric insulation material may be used in direct contact ($s_1 \geq 0$ mm) to Hilti Firestop Wrap CFS-W P: see annex 1, chapter 1.2.12, table 4

Named material may be used in form of an insulation hose, bandage/wrap or plates. If a protect insulation D is used, it should be made of the same elastomeric material as the thermal pipe isolation itself. Pipe insulation could be used in LS and CS situation.

| Local/Sustained pipe insulation (LS) | Continued/Sustained pipe insulation (CS) |
|---|---|
| 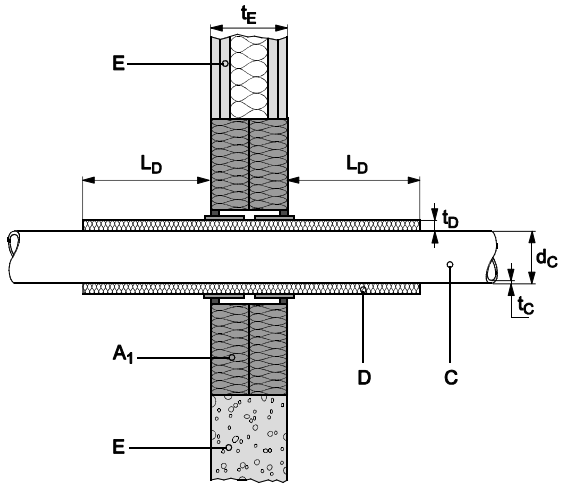  | 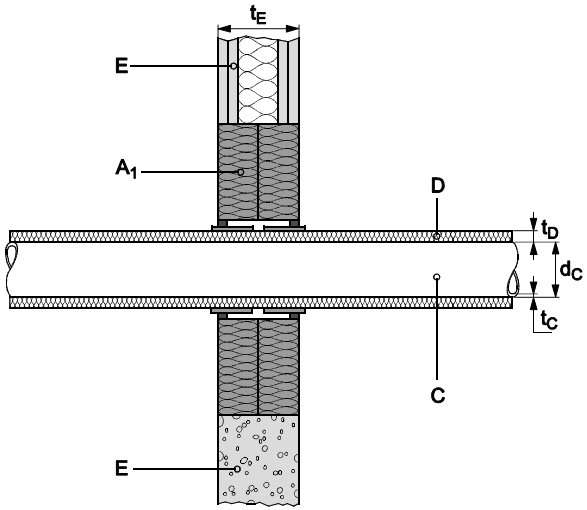  |

#### 2.2.14.3 Pipes, sealed with Hilti Firestop Wrap CFS-W P – construction groups

There are several construction groups which define the number of layers of the Hilti Firestop Wrap CFS-W P, wrapped around the plastic pipes, penetrating the boards CFS-CT.

The number of specific construction group relates always to the number of layers of CFS-W P. (For instance; construction group 4 means always 4 wrapped layers of CFS-W P.)

If the pipe is used in a U/U pipe end configuration, following number of layers is to apply.

| Layer group | Diameter range (mm) | Number of layers |
|---|---|---|
| 2 | 32 to 56 | 2 |
| 3 | 63 to 75 | 3 |
| 4 | 90 to 125 | 4 |
| 5* | 90 to110 | 5 |
| 6 | >135 to 160 | 6 |

* This construction group is only used for PE-pipes provided with Elastomeric insulation

If the pipe is used in a U/C pipe end configuration, following number of layers have to apply.

| Layer group | Diameter range (mm) | Number of layers |
|---|---|---|
| 1 | 32 to 63 | 1 |
| 2 | >63 to 110 | 2 |
| 4 | >110 to 160 | 4 |

Aluminium composite pipes :

| Layer group | Diameter range (mm) | Number of layers |
|---|---|---|
| 1 | 16 to 40 | 1 |
| 2 | 56 to 75 | 2 |

Metal pipes :

| Layer group | Diameter range (mm) | Number of layers |
|---|---|---|
| 1 | 10 to 42 | 1 |
| 2 | > 42 to 114 | 2 |
| 3 | > 114 to 219 | 3 |

#### 2.2.14.4 Pipe support construction

All penetrating pipes have to be supported at maximum 250 mm away from both faces of any walls.

#### 2.2.14.5 Separation of penetrations

General distance rules given in 2.2 are not valid for chapters 2.2.14, 2.2.15 and 2.2.16 (and their sub-chapters)

| | |
|---|---|
| 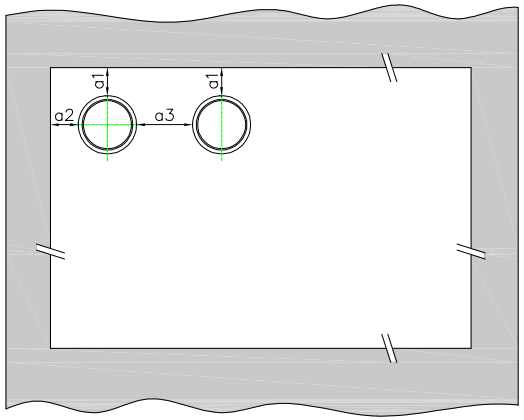 | For separations $a_1 - a_3$, please see detailed description in clause 2.2.14, 2.2.15, 2.2.16 and following sub-chapters. |

### 2.2.14.6 Plastic pipes sealed with Hilti Firestop Wrap CFS-W P penetrating a double board seal CFS-CT in wall

#### 2.2.14.6.1 PE - pipes according to EN 1519-1, EN 12666-1, EN 12201-2 for EI 90-U/U

| PE - pipes according to EN 1519-1, EN 12666-1, EN 12201-2; Seal design: i) according to 2.2.11.1 | | | | | | |
|---|---|---|---|---|---|---|
| Construction group | Pipe diameter Ø dc (mm) | Pipe wall thickness tc (mm) | Separation a1 (mm) | Separation a2 (mm) | Separation a3 (mm) | Classification |
| 2 | 32 to 56 | 3,0 | 25 | 25 | 50 | **EI 90-U/U, E 90-U/U** |
| 3 | > 56 to 75 | 3,0 | 25 | 25 | 50 | |
| 4 | > 75 to 125 | 3,5 to 4,8 | 25 | 25 | 50 | |
| 6 | > 125 to 160 | 6,2 | 25 | 25 | 50 | |

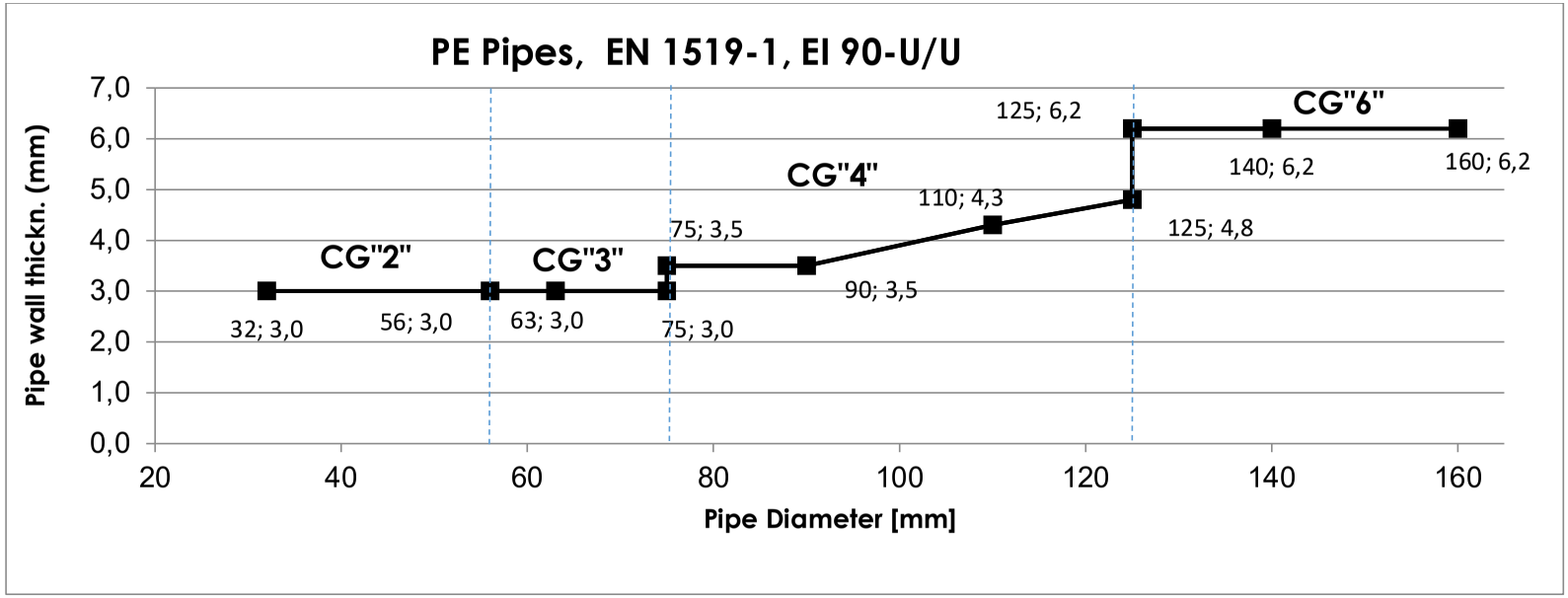

#### 2.2.14.6.2 PE – pipes according to EN 1519-1, EN 12666-1, EN 12201-2 for EI 120-U/U

| PE pipes according to EN 1519-1, EN 12666-1, EN 12201-2 ; Seal design: i) according to 2.2.11.1 | | | | | | |
|---|---|---|---|---|---|---|
| Construction group | Pipe diameter Ø dc (mm) | Pipe wall thickness tc (mm) | Separation a1 (mm) | Separation a2 (mm) | Separation a3 (mm) | Classification |
| 2 | 32 to 56 | 3,0 | 185 | 60 | 70 | **EI 120-U/U; E 120-U/U** |
| 3 | > 56 to 75 | 3,0 | 126 | 31 | 100 | |
| 4 | > 75 to 125 | 4,3 to 4,9 | 25 | 50 | 50 | |
| 6 | > 125 to 160 | 6,2 | 58 | 158 | ≥ 200 | |

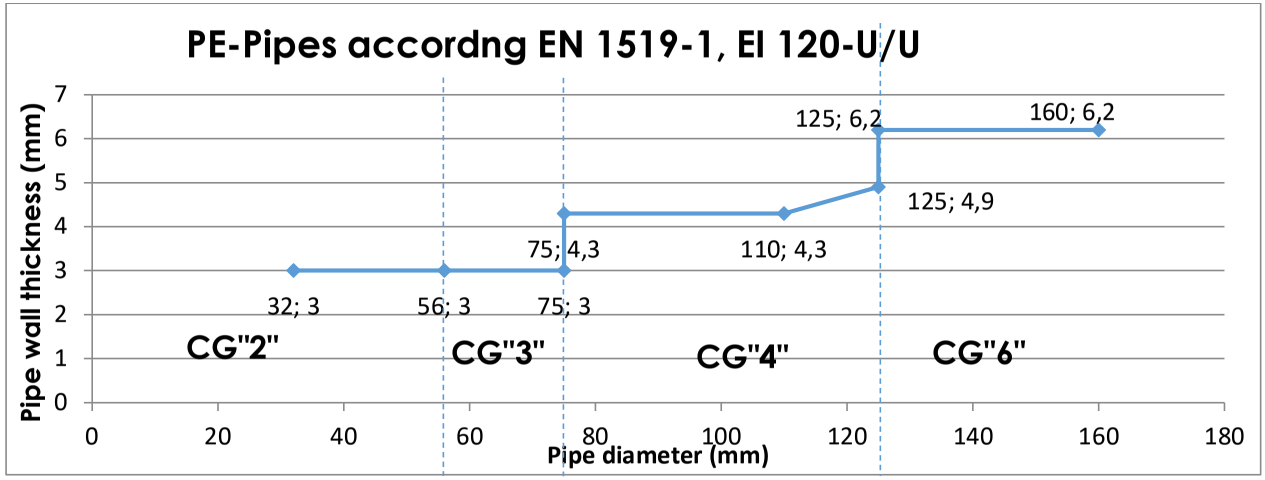

#### 2.2.14.6.3 PE – pipes (isolated) acc.to EN 1519-1, EN 12666-1, EN 12201-2 for EI 90-U/U

| Isolated PE pipes according to EN 1519-1, EN 12666-1, EN 12201-2 ;<br>Seal design: ii) according to 2.2.11.1, Elastomeric Insulation: refer to 2.2.11.2 | | | | | | | |
|---|---|---|---|---|---|---|---|
| Construction group | Pipe diameter Ø dc (mm) | Pipe wall thickness tc (mm) | Pipe insulation thickness (mm) | Separation a1 (mm) | Separation a2 (mm) | Separation a3 (mm) | Classification |
| 2 | 32 to 56 | 3,0 | 9,0 to 21,5 | 25 | 25 | 50 | **EI 90-U/U; E 120-U/U** |
| 4 | > 56 to 75 | 3,0 | 9,5 to 22,0 | 25 | 25 | 50 | |
| 5 | > 75 to 110 | 3,5 to 4,3 | 9,5 to 23,0 | 25 | 25 | 50 | |

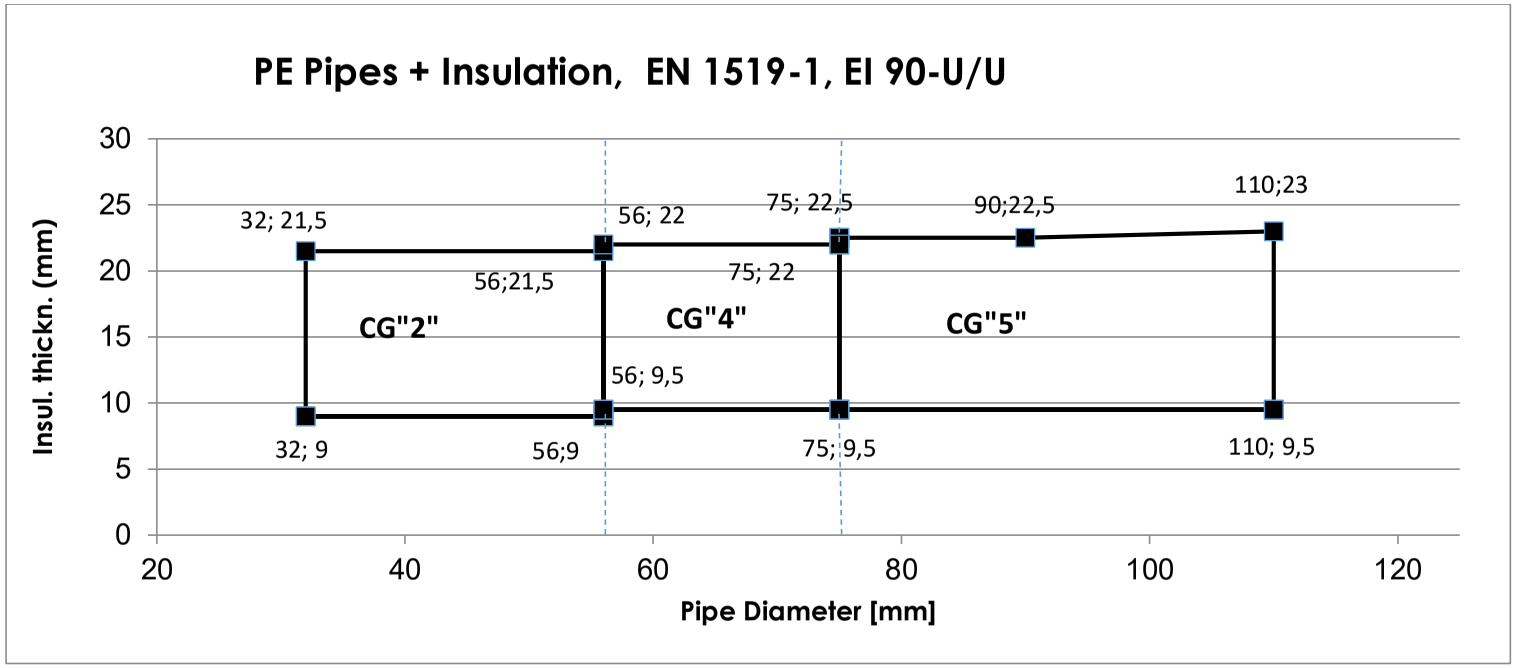

**2.2.14.6.4 PE – pipes (isolated) acc. to EN 1519-1, EN 12666-1, EN 12201-2 for EI 120-U/U**

| Isolated PE pipes according to EN 1519-1, EN 12666-1, EN 12201-2 ; Seal design: ii) according to 2.2.11.2 | | | | | | | |
|---|---|---|---|---|---|---|---|
| Construction group | Pipe diameter Ø dc (mm) | Pipe wall thickness tc (mm) | Pipe insulation thickness (mm) | Separation a1 (mm) | Separation a2 (mm) | Separation a3 (mm) | Classification |
| 2 | 32 to 56 | 3,0 | 9,0 to 21,5 | 141 | 50 | 50 | **EI 120-U/U; E 120-U/U** |
| 5 | 110 | 4,3 | 9,5 | 100 | 50 | 70 | |

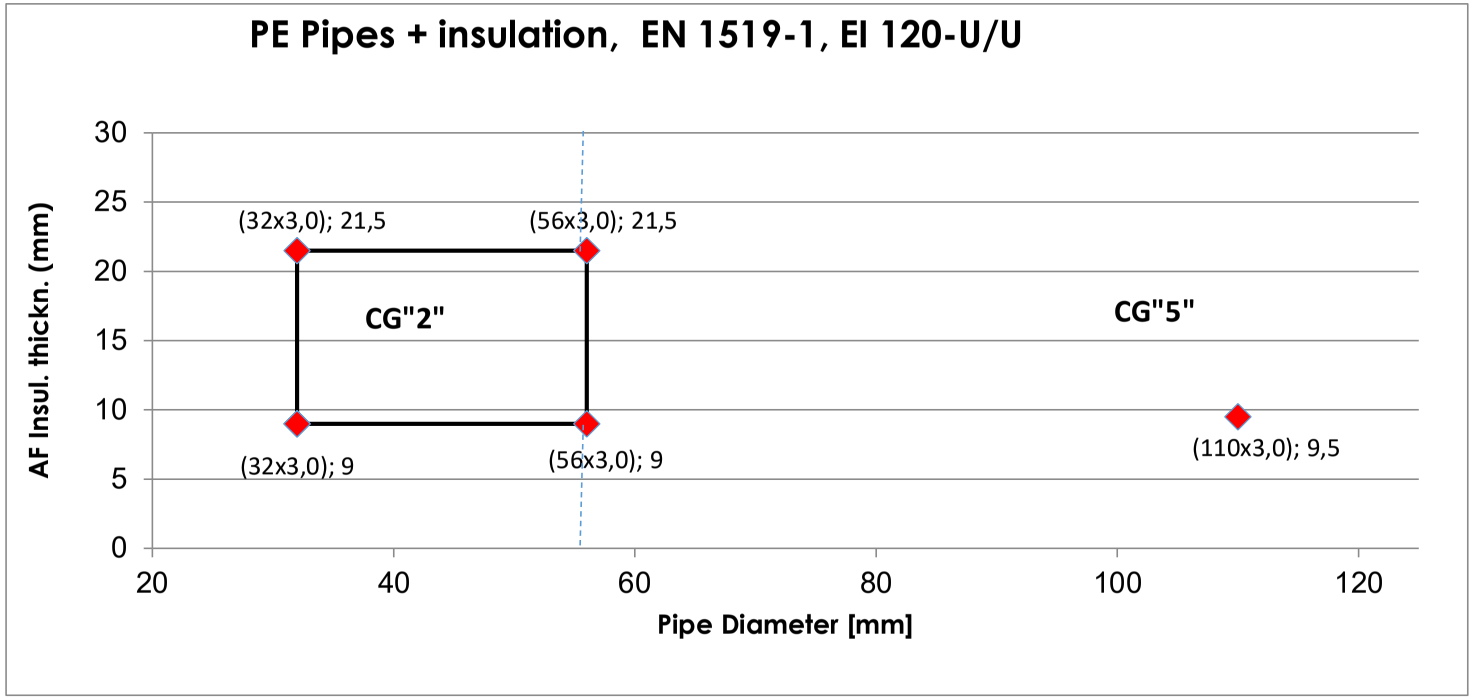

### 2.2.14.6.5 PE-pipes, Geberit Silent dB20 EI 90-U/U

| PE-pipes, non-regulated, designation Geberit Silent dB20 | | | | | | |
|---|---|---|---|---|---|---|
| Layers | Pipe diameter Ø dc (mm) | Pipe wall thickness tc (mm) | Separation a1 (mm) | Separation a2 (mm) | Separation a3 (mm) | Classification |
| 2 | 56 | 3,2 | 25 | 25 | 50 | **EI 90-U/U and E 120-U/U** |
| 3 | >56 to 75 | 3,2 to 3,6 | 25 | 25 | 50 | |
| 4 | >75 to 110 | 5,5 to 6,0 | 25 | 25 | 50 | |
| 6 | >110 to 160 | 6,0 to 7,0 | 25 | 25 | 50 | |

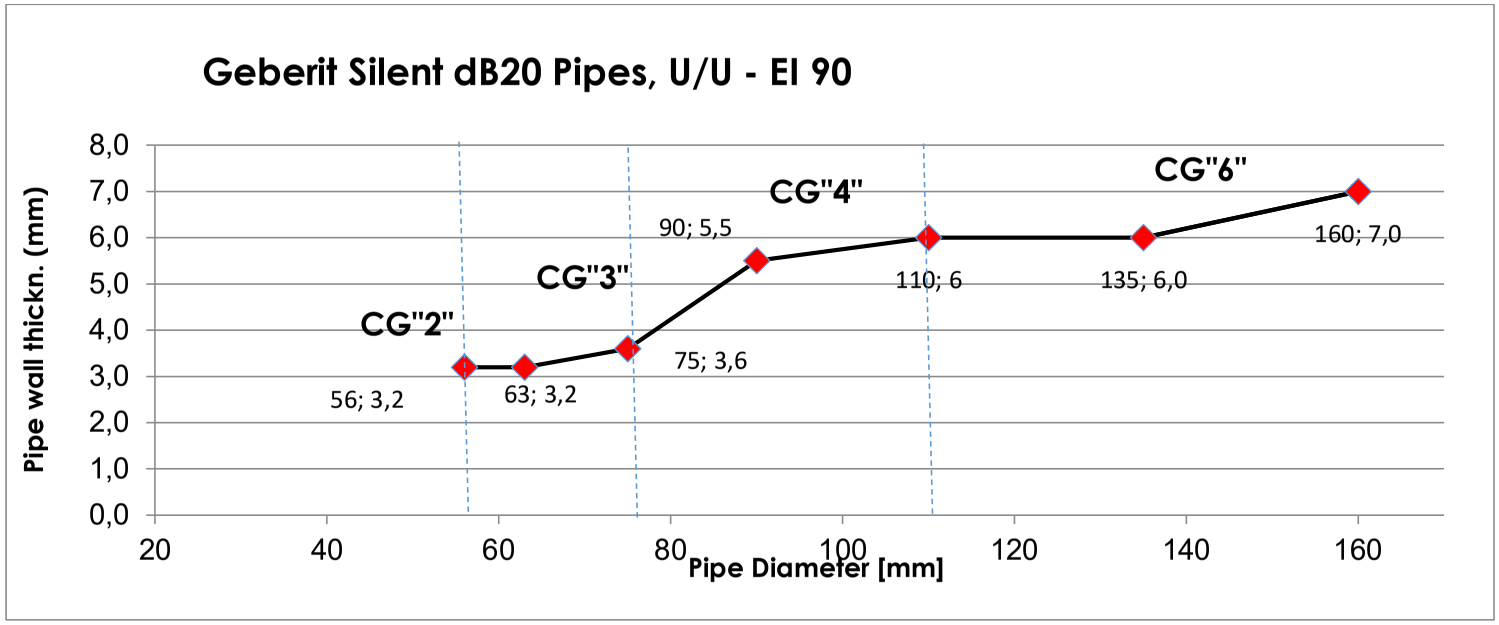

### 2.2.14.6.6 PE-pipes, Geberit Silent dB20 EI 120-U/U

| PE-pipes, non-regulated, designation: Geberit Silent dB20 | | | | | | |
|---|---|---|---|---|---|---|
| Layers | Pipe diameter Ø dc (mm) | Pipe wall thickness tc (mm) | Separation a1 (mm) | Separation a2 (mm) | Separation a3 (mm) | Classification |
| 2 | 56 | 3,2 | 50 | 50 | 100 | **EI 120-U/U; E 120-U/U** |
| 3 | >56 to 75 | 3,2 to 3,6 | 173 | 50 | 100 | |
| 4 | >75 to 110 | 5,5 to 6,0 | 142 | 154 | 100 | |
| 6 | >110 to 135 | 6,0 | 25 | 25 | 25 | |

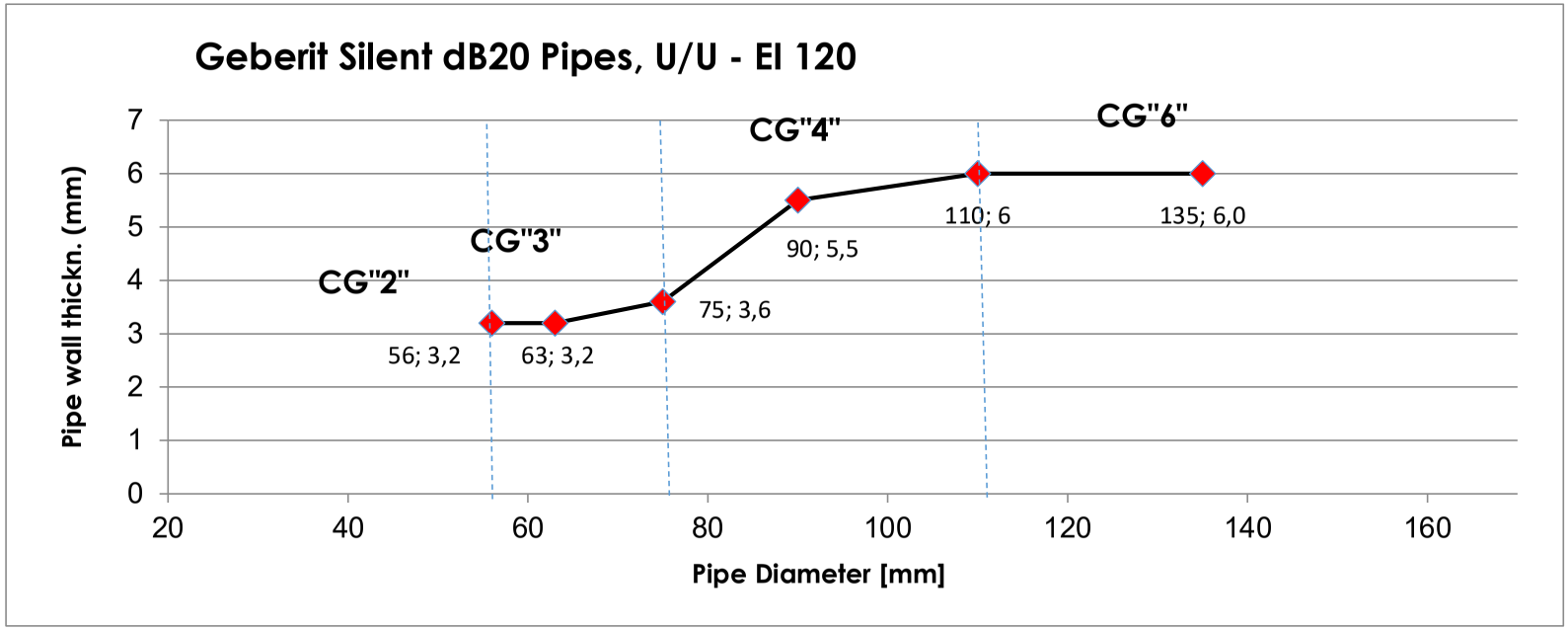

### 2.2.14.6.7 PE – pipes acc. EN 15494 EI 90-U/C

| PE-pipes according EN 15494 | | | | | | |
|---|---|---|---|---|---|---|
| Layers | Pipe diameter Ø dc (mm) | Pipe wall thickness tc (mm) | Separation a1 (mm) | Separation a2 (mm) | Separation a3 (mm) | Classification |
| 2 | 32 to 50 | 1,8 to 6,9 | 25 | 25 | 25 | **EI 90-U/C, E 120-U/C** |
| 3 | > 50 (1,8 to 6,8) to 75 (1,9 to 6,8) | | 25 | 25 | 25 | |
| 4 | > 75 (2,2 to 7,4) to 90 (2,2 to 7,4) to 125 (3,1 to 7,1) | | 25 | 25 | 25 | |
| 6 | > 125 (3,5 to 9,1) to 140 (3,5 to 9,1) to 160 (4,0 to 9,1) | | 25 | 25 | 25 | |

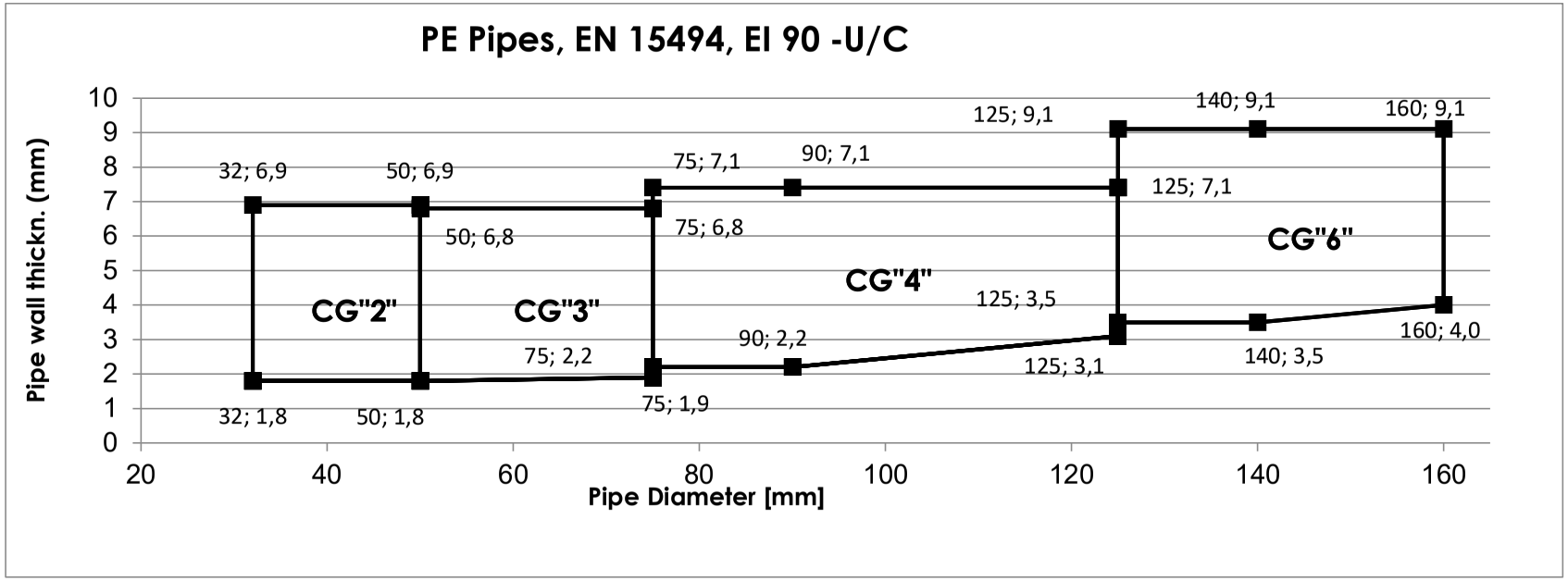

### 2.2.14.6.8 PE – pipes acc. EN 15494 EI 120-U/C

| PE-pipes according EN 15494 | | | | | | |
|---|---|---|---|---|---|---|
| Layers | Pipe diameter Ø dc (mm) | Pipe wall thickness tc (mm) | Separation a1 (mm) | Separation a2 (mm) | Separation a3 (mm) | Classification |
| 2 | 32 to 50 | 1,8 to 6,9 | 214 | 107 | 100 | **EI 120-U/C , E 120-U/C** |
| 3 | > 50 (1,8 to 6,8) to 75 (1,9 to 6,8) | | 200 | 176 | 100 | |
| 4 | > 75 (1,9 to 7,1) to 90 (2,2 to 7,1) to 125 (3,1 to 7,1) | | 108 | 50 | 100 | |
| 6 | > 125 (3,5 to 9,1) to 140 (3,5 to 9,1) to > 160 (4,0 to 9,1) | | 66 | 50 | 100 | |

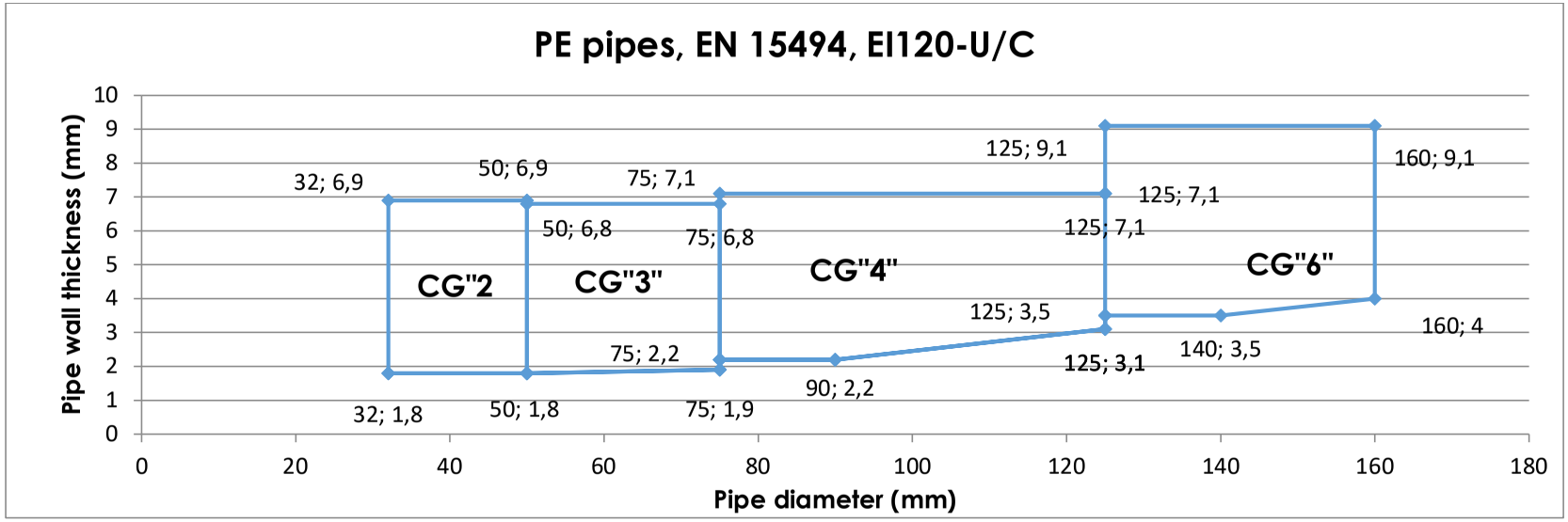

### 2.2.14.6.9 PP – pipes, non-regulated EI 90-U/U

| PP – pipes, non-regulated ,<br>For pipe type/manufacturer refer to 2.1.6. | | | | | | |
|---|---|---|---|---|---|---|
| Layers | Pipe diameter Ø dc (mm) | Pipe wall thickness tc (mm) | Separation a1 (mm) | Separation a2 (mm) | Separation a3 (mm) | Classification |
| 2 | > 32 (1,8 to 4,0) to 50 (1,8 to 4,0)<br>58 (4,0 to 4,0) | | 25 | 25 | 50 | **EI 90-U/U**<br>**E 120 – U/U** |
| 3 | 50 (1,9 to 1,9) to 58 (1,9 to 4,0) to<br>63 (1,9 to 3,8) to 75 (1,9 to 3,8) | | 25 | 25 | 50 | |
| 4 | > 75 (2,2 to 5,3) to 90 (2,2 to 5,3) to<br>125 (3,1 to 5,3) | | 25 | 25 | 50 | |
| 6 | >125 (3,9 to 7,5) to 160 (3,9 to 7,5) | | 25 | 25 | 50 | |

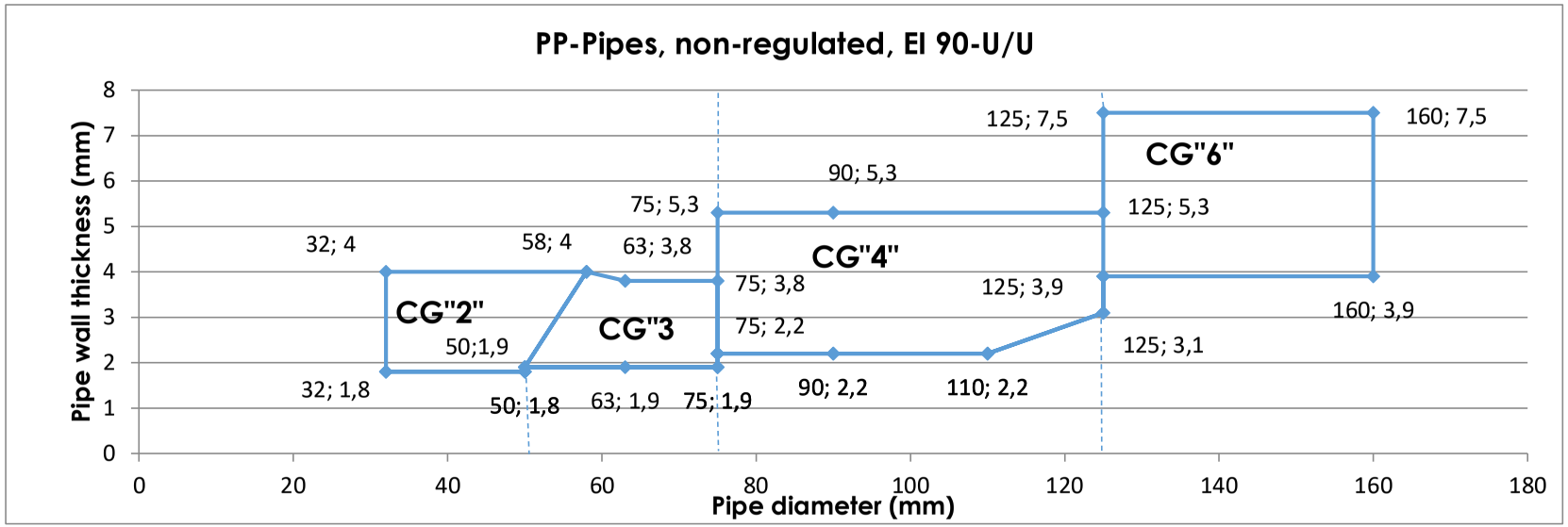

### 2.2.14.6.10 PP – pipes, non-regulated EI 120-U/U

| PP – pipes, non-regulated ,<br>designation: Coes Blue Power, Coes PhoNo Fire, Geberit Silent PP, Marley Silent, Ostendorf Skolan dB, Pipelife Master 3, Poloplast Polokal NG, Poloplast Polokal 3S, Poloplast Polokal XS, Rehau Raupiano Plus, Kekelit PhonEX AS, Valsir Triplus, Valsir Silere, Wavin SiTech, Wavin AS | | | | | | |
|---|---|---|---|---|---|---|
| Layers | Pipe diameter Ø dc (mm) | Pipe wall thickness tc (mm) | Separation a1 (mm) | Separation a2 (mm) | Separation a3 (mm) | Classification |
| 2 | 32 (1,8 to 4,0) to 50 (1,8 to 4,0) to 58 (4,0 to 4,0) | | 191 | 50 | 130 | **EI 120-U/U, E 120-U/U** |
| 3 | 75 | 1,9 | 162 | 25 | 100 | |
| 4 | > 75 (2,2 to 5,3) to 125 (3,1 to 5,3) | | 143 | 50 | 100 | |
| 6 | 160 | 3,9 | 160 | 60 | 20 | |

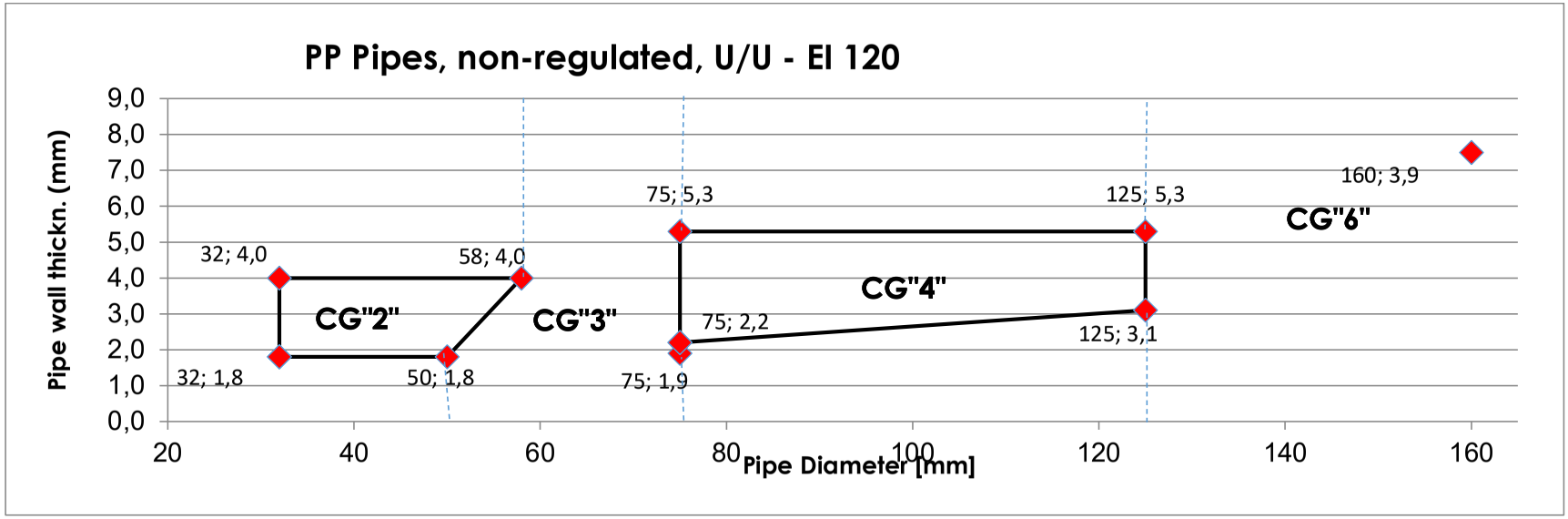

### 2.2.14.6.11 PVC-pipes according to EN 1452-1 - EI 90-U/U

| PVC – pipes, according EN 1452-1 , | | | | | | |
|---|---|---|---|---|---|---|
| Layers | Pipe diameter Ø dc (mm) | Pipe wall thickness tc (mm) | Separation a1 (mm) | Separation a2 (mm) | Separation a3 (mm) | Classification |
| 2 | 32 to 50 | 1,8 to 5,6 | 25 | 25 | 50 | **EI 90-U/U** **E 120-U/U** |
| 3 | > 50 to 75 | 2,2 to 5,6 | 25 | 25 | 50 | |
| 4 | > 75 to 90 | 1,8 to 8,1 | 25 | 25 | 50 | |
| 4 | > 90 (1,8 to 8,1) to 110 (2,2 to 8,1) | | 25 | 25 | 50 | |
| 4 | > 110 (2,2 to 8,1) to 125 (3,7 to 6,0) | | 25 | 25 | 50 | |
| 6 | > 125 to 160 | 2,5 to 11,8 | 25 | 25 | 50 | |

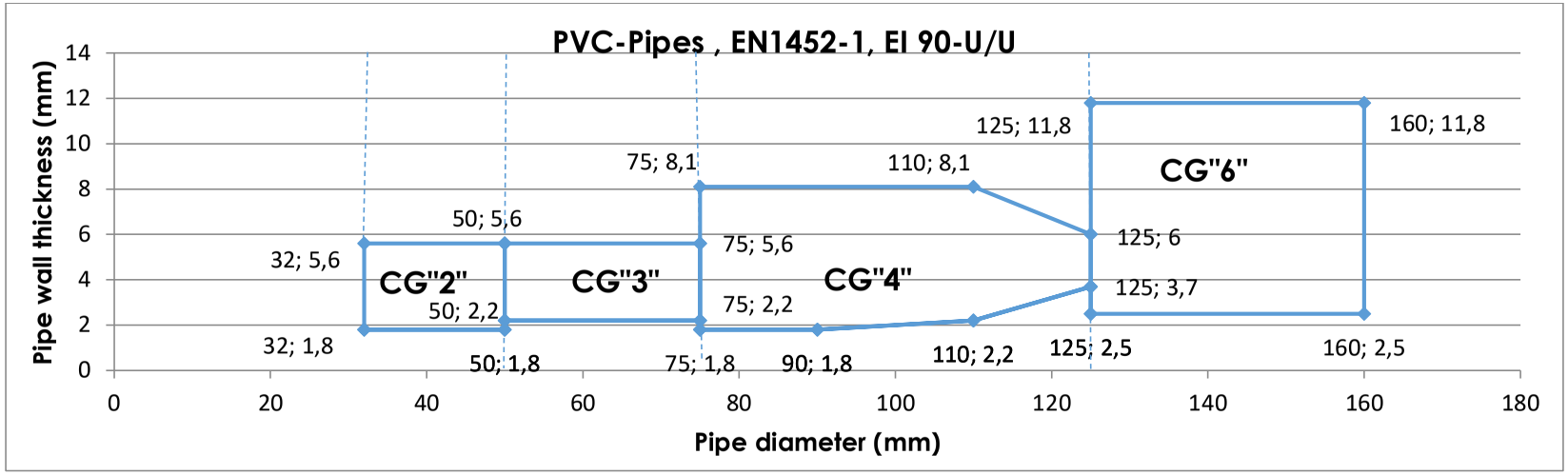

### 2.2.14.6.12 PVC-pipes according to EN 1452-1 - EI 120-U/U

| For EI 120-U/U, PVC – pipes, according EN 1452-1 , | | | | | | |
|---|---|---|---|---|---|---|
| Layers | Pipe diameter Ø dc (mm) | Pipe wall thickness tc (mm) | Separation a1 (mm) | Separation a2 (mm) | Separation a3 (mm) | Classification |
| 2 | 32 (1,8 to 5,6) to 50 (1,8 to 5,6) | | 115 | 107 | 100 | **EI 120-U/U** |
| 3 | > 50 (1,8 to 5,6) to 75 (1,9 to 5,6) | | 150 | 174 | 100 | |
| 4 | > 75 (2,2 to 6,0) to 110 (2,2 to 6,0) to 125 (3,7 to 6,0) | | 185 | 80 | 100 | |
| 6 | > 125 (2,5 to 11,8) to 160 (2,5 to 11,8) | | 50 | 50 | 100 | |

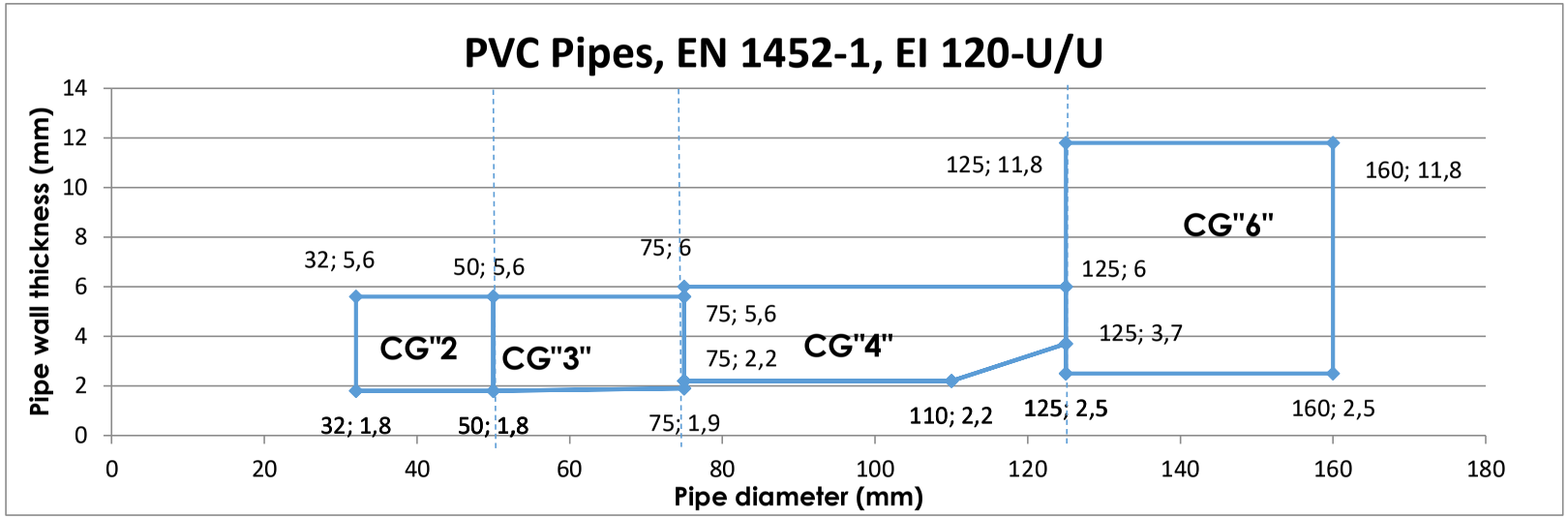

#### 2.2.14.6.13 Geberit PushFit PB

| | Material: PB (Polybuten)<br>Seal design: ii) according 2.2.11.1<br>Approved pipe insulation material (CS): flexible elastomeric insulation see 2.2.11.2, distances: $S_8 \geq$ 100mm, $S_6 \geq$50mm (see 2.2) | | | | | | |
|---|---|---|---|---|---|---|---|
| Layers | Pipe diameter Ø dc (mm) | Pipe wall thickness tc (mm) | Pipe insulation Material: | Pipe insulation thickness (mm) | Addtitional Protect Insulation Material: | Addtitional Protect Insulation thickness (mm) | Classification |
| 3 | 20 | 2,0 | Elastomer, see 2.2.11.2 | 8,5 to 25,0 | none | 0 | **EI 120-U/C** |
| 3 | 25 | 2,5 | Elastomer, see 2.2.11.2 | 9,0 to 27,0 | none | 0 | **EI 120-U/C** |
| | Approved pipe insulation material (LS, total length: $\geq$ 650mm): PE hardcover Geberit for Geberit PushFit PB | | | | | | |
| 1 | 20 | 2,0 | PE-foam | 6 | none | 0 | **EI 120-U/C** |
| 1 | 25 | 2,5 | PE-foam | 6 | none | 0 | **EI 120-U/C** |

### 2.2.15 Aluminium composite pipes with elastomeric insulation, penetrating a CFS-CT double board seal, provided with Hilti firestop wrap CFS-W P and gap filler

#### 2.2.15.1 Rehau Rautitan Stabil, penetrating CFS-CT, sealed with CFS-W P

| | Classification : **EI 90-U/C**, **E120-U/C**<br>Material: PE-Xa/AL/PE-HD, seal type iii) according 2.2.11.1, Approved pipe insulation material: see 2.2.11.2 | | | | | | |
|---|---|---|---|---|---|---|---|
| Layers | Pipe diameter Ø dc (mm) | Pipe wall thickness tc (mm) | Pipe insulation thickness (mm) | Separation a1 (mm) | Separation a2 (mm) | Separation a3 (mm) | Classification |
| 1 | 16 | 2,6 | 8,0 to 32,0 | 25 | 0 | 0 | **EI 90-U/C, E 120** |
| 1 | 20 | 2,9 | 8,5 to 33,5 | 25 | 0 | 0 | |
| 1 | 25 | 3,7 | 8,5 to 35,0 | 25 | 0 | 0 | |
| 1 | 32 | 4,7 | 9,0 to 35,0 | 25 | 0 | 0 | |
| 1 | 40 | 6,0 | 9,0 to 35,0 | 25 | 0 | 0 | |

| | Classification : **EI 120-U/C, E 120-U/C**<br>Material: PE-Xb/AL/PE-HD, seal type iii) according 2.2.11.1, Approved pipe insulation material: see 2.2.11.2 | | | | | | |
|---|---|---|---|---|---|---|---|
| Layers | Pipe diameter Ø dc (mm) | Pipe wall thickness tc (mm) | Pipe insulation thickness (mm) | Separation a1 (mm) | Separation a2 (mm) | Separation a3 (mm) | Classification |
| 1 | 16 | 2,6 | 8,0 to 32,0 | 213 | 50 | 50 | **EI 120-U/C, E 120-U/C** |
| 1 | 20 | 2,9 | 8,5 to 33,5 | 213 | 50 | 50 | |
| 1 | 25 | 3,7 | 8,5 to 35,0 | 213 | 50 | 50 | |
| 1 | 32 | 4,7 | 9,0 to 35,0 | 213 | 50 | 50 | |
| 1 | 40 | 6,0 | 9,0 to 35,0 | 213 | 50 | 50 | |

### 2.2.15.2 Uponor MLC, penetrating CFS-CT, sealed with CFS-W P

| | Classification : **EI 90-U/C**, **E 120-U/C**<br>Material: PE-RT/AL/PE-RT, seal type iii) according 2.2.11.1, Approved pipe insulation material: see 2.2.11.2 | | | | | | |
|---|---|---|---|---|---|---|---|
| Layers | Pipe diameter Ø dc (mm) | Pipe wall thickness tc (mm) | Pipe insulation thickness (mm) | Separation a1 (mm) | Separation a2 (mm) | Separation a3 (mm) | Classification |
| 1 | 16 | 2,0 | 8,0 to 32,0 | 25 | 0 | 0 | **EI 90-U/C, E 120-U/C** |
| 1 | 20 | 2,25 | 8,5 to 33,5 | 25 | 0 | 0 | |
| 1 | 25 | 2,5 | 8,5 to 35,0 | 25 | 0 | 0 | |
| 1 | 32 | 3,0 | 9,0 to 35,0 | 25 | 0 | 0 | |
| 2 | 50 | 4,5 | 9,0 to 38,0 | 25 | 0 | 0 | |
| 2 | 63 | 6,0 | 9,5 to 39,5 | 25 | 0 | 0 | |
| 2 | 75 | 7,5 | 9,5 to 40,5 | 25 | 0 | 0 | |
| | Classification : **EI 120-U/C, E 120-U/C**<br>Material: PE-RT/AL/PE-RT, seal type iii) according 2.2.11.1, Approved pipe insulation material: see 2.2.11.2 | | | | | | |
| Layers | Pipe diameter Ø dc (mm) | Pipe wall thickness tc (mm) | Pipe insulation thickness (mm) | Separation a1 (mm) | Separation a2 (mm) | Separation a3 (mm) | Classification |
| 1 | 16 | 2,0 | 8,0 to 32,0 | 213 | 50 | 0 | **EI 120-U/C, E 120-U/C** |
| 1 | 20 | 2,25 | 8,5 to 33,5 | 213 | 50 | 0 | |
| 1 | 25 | 2,5 | 8,5 to 35,0 | 213 | 50 | 0 | |
| 1 | 32 | 3,0 | 9,0 to 35,0 | 213 | 50 | 0 | |
| 2 | 50 | 4,5 | 9,0 to 38,0 | 109 | 0 | 0 | |
| 2 | 63 | 6,0 | 9,5 to 39,5 | 109 | 0 | 0 | |
| 2 | 75 | 7,5 | 9,5 to 40,5 | 109 | 0 | 0 | |

### 2.2.15.3 Kekelit Kelox, penetrating CFS-CT, sealed with CFS-W P

| | Material: PE-X/AL/PE-X, seal type iii) according 2.2.11.1<br>Approved pipe insulation material: see 2.2.11.2 | | | | | | |
|---|---|---|---|---|---|---|---|
| Layers | Pipe diameter Ø dc (mm) | Pipe wall thickness tc (mm) | Pipe insulation thickness (mm) | Separation a1 (mm) | Separation a2 (mm) | Separation a3 (mm) | Classification |
| 1 | 16 | 2,0 | 8,0 to 32,0 | 25 | 0 | 0 | **EI 90-U/C, E 120-U/C** |
| 1 | 20 | 2,25 | 8,5 to 33,5 | 25 | 0 | 0 | |
| 1 | 25 | 2,5 | 8,5 to 35,0 | 25 | 0 | 0 | |
| 1 | 32 | 3,0 | 9,0 to 35,0 | 25 | 0 | 0 | |
| 2 | > 32 | > 3,0 | 9,0 to 35,0 | 25 | 0 | 0 | |
| 2 | 75 | 7,5 | 9,5 to 40,5 | 25 | 0 | 0 | |

| | Material: PE-X/AL/PE-X, seal type iii) according 2.2.11.1<br>Approved pipe insulation material: see 2.2.11.2 | | | | | | |
|---|---|---|---|---|---|---|---|
| Layers | Pipe diameter Ø dc (mm) | Pipe wall thickness tc (mm) | Pipe insulation thickness (mm) | Separation a1 (mm) | Separation a2 (mm) | Separation a3 (mm) | Classification |
| 1 | 16 | 2,0 | 8,0 to 32,0 | 149 | 25 | 25 | **EI 120-U/C, E 120-U/C** |
| 1 | 20 | 2,25 | 8,5 to 33,5 | 167 | 25 | 50 | |
| 1 | 25 | 2,5 | 8,5 to 35,0 | 167 | 25 | 50 | |
| 1 | 32 | 3,0 | 9,0 to 35,0 | 167 | 25 | 50 | |
| 2 | > 32 | > 3,0 | 9,0 to 35,0 | 25 | 25 | 0 | |
| 2 | 75 | 7,5 | 9,5 to 40,5 | 25 | 25 | 0 | |

### 2.2.15.4 Geberit Mepla, penetrating CFS-CT, sealed with CFS-W P

| | Material: PE-Xb/AL/PE-HD, seal type iii) according 2.2.11.1<br>Approved pipe insulation material: see 2.2.11.2 | | | | | | |
|---|---|---|---|---|---|---|---|
| Layers | Pipe diameter Ø dc (mm) | Pipe wall thickness tc (mm) | Pipe insulation thickness (mm) | Separation a1 (mm) | Separation a2 (mm) | Separation a3 (mm) | Classification |
| 1 | 16 | 2,3 | 8,0 to 32,0 | 25 | 0 | 0 | **EI 90-U/C, E 120-U/C** |
| 1 | 20 | 2,5 | 8,5 to 33,5 | 25 | 0 | 0 | |
| 1 | 26 | 3,0 | 8,5 to 35,0 | 25 | 0 | 0 | |
| 1 | 32 | 3,0 | 9,0 to 35,0 | 25 | 0 | 0 | |
| 2 | > 32 | > 3,0 | 9,0 to 36,0 | 25 | 0 | 0 | |
| 2 | 75 | 7,5 | 9,5 to 40,5 | 25 | 0 | 0 | |

| | Material: PE-Xb/AL/PE-HD, seal type iii) according 2.2.11.1<br>Approved pipe insulation material: see 2.2.11.2 | | | | | | |
|---|---|---|---|---|---|---|---|
| Layers | Pipe diameter Ø dc (mm) | Pipe wall thickness tc (mm) | Pipe insulation thickness (mm) | Separation a1 (mm) | Separation a2 (mm) | Separation a3 (mm) | Classification |
| 1 | 16 | 2,3 | 8,0 to 32,0 | 212 | 107 | 50 | **EI 120-U/C, E 120-U/C** |
| 1 | 20 | 2,5 | 8,5 to 33,5 | 212 | 107 | 50 | |
| 1 | 26 | 3,0 | 8,5 to 35,0 | 212 | 107 | 50 | |
| 1 | 32 | 3,0 | 9,0 to 35,0 | 140 | 103 | 50 | |

### 2.2.15.5 Viega Sanfix Fosta and Viega Raxofix, penetrating CFS-CT, sealed with CFS-W P

| | Material: PE-Xc/AL/PE-Xc, seal type iii) according 2.2.11.1<br>Approved pipe insulation material (CS): flexible elastomeric insulation see 2.2.11.2, distances: $S_8 \geq$ 100mm, $S_6 \geq$50mm (see 2.6)<br>Addtitional Protect Insulation (LI, 250mm): flexible elastomeric insulation see 2.2.11.2 or mineral wool see AP7 | | | | | | |
|---|---|---|---|---|---|---|---|
| Layers | Pipe diameter Ø dc (mm) | Pipe wall thickness tc (mm) | Pipe insulation Material: | Pipe insulation thickness (mm) | Addtitional Protect Insulation Material: | Addtitional Protect Insulation thickness (mm) | Classification |
| 1 | 16 | 2,2 | Elastomer, see 2.2.11.2 | 8,0 to 32,0 | none | 0 | **EI 120-U/C** |
| 1 | 20 | 2,8 | Elastomer, see 2.2.11.2 | 8,5 to 33,5 | none | 0 | **EI 120-U/C** |
| 1 | 25 | 2,7 | Elastomer, see 2.2.11.2 | 8,5 to 35,0 | none | 0 | **EI 120-U/C** |
| 1 | 32 | 3,2 | Elastomer, see 2.2.11.2 | 9,0 to 35,0 | none | 0 | **EI 120-U/C** |
| 1 | 40 | 3,5 | Elastomer, see 2.2.11.2 | 9,0 to 36,5 | none | 0 | **EI 120-U/C** |
| 2 | 50 | 4,0 | Elastomer, see 2.2.11.2 | 9,0 to 38,0 | none | 0 | **EI 60-U/C** |
| 2 | 63 | 4,5 | Elastomer, see 2.2.11.2 | 9,5 to 39,5 | none | 0 | **EI 60-U/C** |
| 2 | 63 | 4,5 | Elastomer, see 2.2.11.2 | 9,5 to 39,5 | Elastomer, see 2.2.11.2 | 19 | **EI 120-U/C** |
| 2 | 63 | 4,5 | Elastomer, see 2.2.11.2 | 9,5 to 39,5 | Mineral wool | 30 | **EI 120-U/C** |

| | Viega Sanfix Fosta and Raxofix pipes:<br>Material: PE-Xc/AL/PE-Xc, seal type iii) according 2.2.11.1<br>Approved pipe insulation material (CS): flexible elastomeric insulation see 2.2.11.2, distances: $S_8 \geq$ 100mm, $S_6 \geq$50mm (see 2.6) | | | | | | |
|---|---|---|---|---|---|---|---|
| Layers | Pipe diameter Ø dc (mm) | Pipe wall thickness tc (mm) | Pipe insulation Material: | Pipe insulation thickness (mm) | Addtitional Protect Insulation Material: | Addtitional Protect Insulation thickness (mm) | Classification |
| 0 | 16 | 2,2 | Mineral wool, see 2.1.4 | 20 to 40 | none | 0 | **EI 120-U/C** |
| 0 | 20 | 2,8 | Mineral wool, see 2.1.4 | 20 to 50 | none | 0 | **EI 120-U/C** |
| 0 | 25 | 2,7 | Mineral wool, see 2.1.4 | 20 to 60 | none | 0 | **EI 120-U/C** |
| 0 | 32 | 3,2 | Mineral wool, see 2.1.4 | 20 to 60 | none | 0 | **EI 120-U/C** |
| 0 | 40 | 3,5 | Mineral wool, see 2.1.4 | 20 to 60 | none | 0 | **EI 120-U/C** |
| 0 | 50 | 4,0 | Mineral wool, see 2.1.4 | 20 to 60 | none | 0 | **EI 120-U/C** |
| 0 | 63 | 4,5 | Mineral wool, see 2.1.4 | 20 to 60 | none | 0 | **EI 120-U/C** |

### 2.2.15.6 Geberit PushFit ML, penetrating CFS-CT, sealed with CFS-W P

| | Material: PE-HD/AL/PE-HD, seal type iii) according 2.2.11.1<br>Approved pipe insulation material (CS): flexible elastomeric insulation see 2.2.11.2, distances: $S_8 \geq$ 100mm, $S_6 \geq$50mm (see 2.2) | | | | | | |
|---|---|---|---|---|---|---|---|
| Layers | Pipe diameter Ø<br>dc (mm) | Pipe wall thickness tc (mm) | Pipe insulation<br>Material: | Pipe insulation thickness (mm) | Addtitional Protect Insulation Material: | Addtitional Protect Insulation thickness (mm) | Classification |
| 1 | 20 | 2,0 | Elastomer, see 2.2.11.2 | 8,5 to 33,5 | none | 0 | **EI 120-U/C** |
| 1 | 25 | 2,5 | Elastomer, see 2.2.11.2 | 8,5 to 35,0 | none | 0 | **EI 120-U/C** |
| 0 | 20 | 2,0 | Mineral wool, see 2.1.4 | 20 to 40 | none | 0 | **EI 120-U/C** |
| 0 | 25 | 2,5 | Mineral wool, see 2.1.4 | 20 to 60 | none | 0 | **EI 120-U/C** |
| | Approved pipe insulation material (LS, total length: $\geq$ 600mm): flexible PE isolation | | | | | | |
| 1 | 20 | 2,0 | PE-foam | 6 | none | 0 | **EI 120-U/C** |
| 1 | 25 | 2,5 | PE-foam | 6 | none | 0 | **EI 120-U/C** |

## 2.2.16 Metal pipes with elastomeric insulation, penetrating a CFS-CT double board seal, provided with Hilti firestop wrap CFS-W P and gap filler

### 2.2.16.1 Isolated copper pipes, penetrating CFS-CT, sealed with CFS-W P

| | Material: copper, stainless steel, steel, iron, seal type iv) according 2.2.11.1<br>Approved pipe insulation material: see 2.2.11.2 | | | | | | |
|---|---|---|---|---|---|---|---|
| Layers | Pipe diameter Ø dc (mm) | Pipe wall thickness tc (mm) | Pipe insulation thickness (mm) | Separation a1 (mm) | Separation a2 (mm) | Separation a3 (mm) | Classification |
| 1 | 10 | 1,0 to 1,2 | 7,5 to 32,0 | 25 | 25 | 50 | **EI 90-C/U, E 120-C/U** |
| 1 | 42 | 1,0 to 1,2 | 9,0 to 36,5 | 25 | 25 | 50 | |

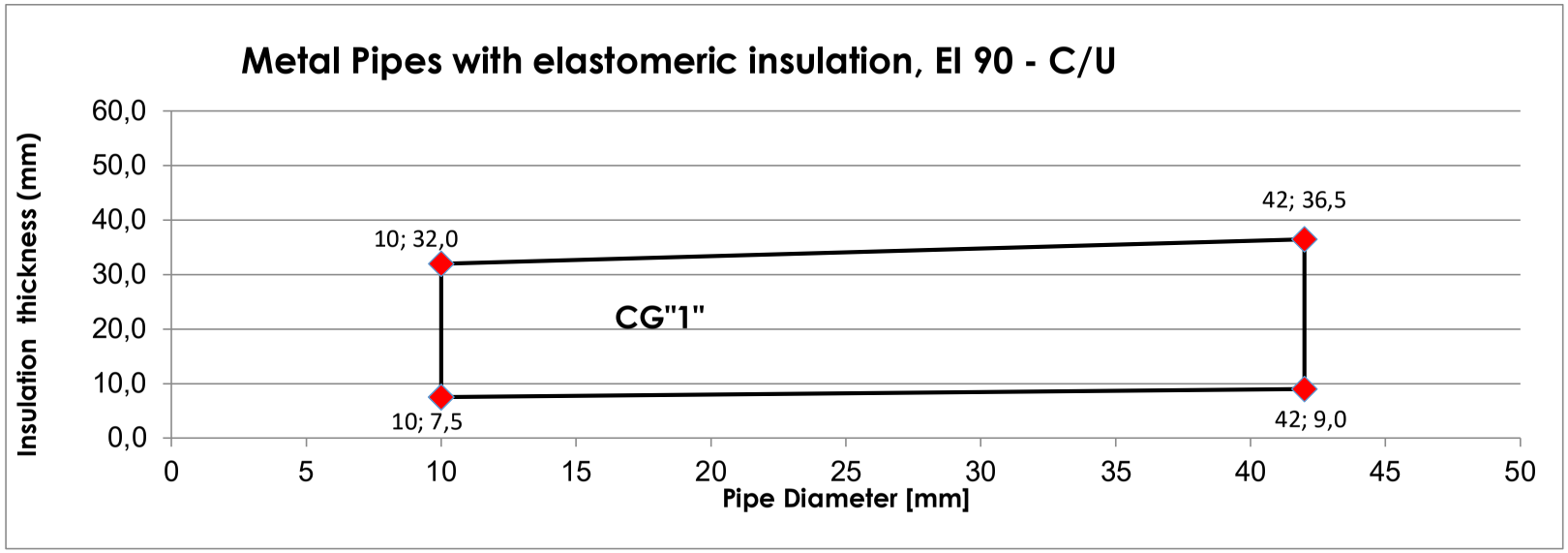

| | Material: copper, stainless steel, steel, iron, seal type iv) according 2.2.11.1<br>Approved pipe insulation material: see 2.2.11.2 | | | | | | |
|---|---|---|---|---|---|---|---|
| Layers | Pipe diameter Ø dc (mm) | Pipe wall thickness tc (mm) | Pipe insulation thickness (mm) | Separation a1 (mm) | Separation a2 (mm) | Separation a3 (mm) | Classification |
| 1 | 10 | 1,0 | 7,5 to 32,0 | 25 | 25 | 50 | **EI 120-C/U, E 120-C/U** |
| 1 | 28 | 1,0 | 8,5 to 35,0 | 25 | 25 | 50 | |

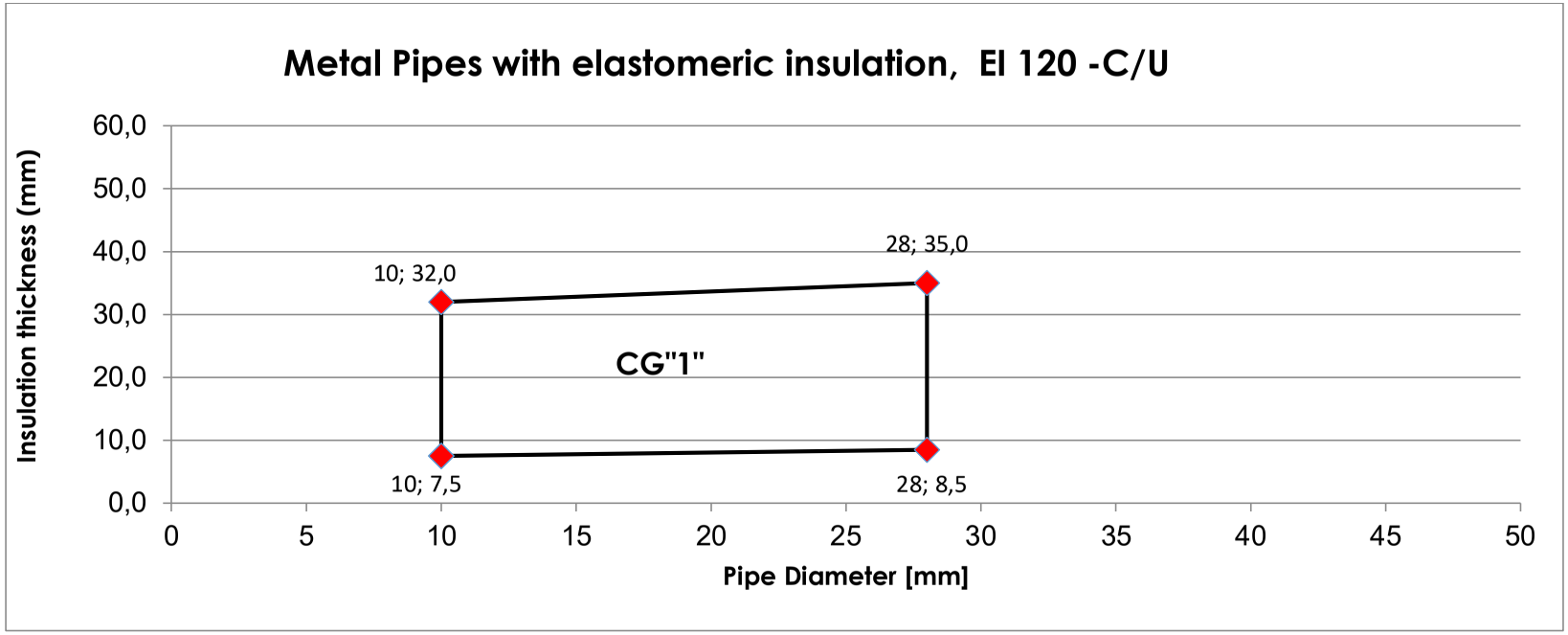

### 2.2.16.2 Isolated steel pipes, penetrating CFS-CT, sealed with CFS-W P

| | Material: stainless steel, steel, iron; seal type v) according 2.2.11.1<br>Approved pipe insulation material: see 2.2.11.2 | | | | | | |
|---|---|---|---|---|---|---|---|
| Layers | Pipe diameter Ø dc (mm) | Pipe wall thickness tc (mm) | Pipe insulation thickness (mm) | Separation a1 (mm) | Separation a2 (mm) | Separation a3 (mm) | Classification |
| 1 | 10 to 28 | 1,0 | 7,5/8,5 to 32,0/35,0 | 25 | 25 | 50 | **EI 90-C/U, E 120-C/U** |
| 2 | > 28 to 114 | 3,4 | 8,5/9,5 to 35,0/43,0 | 25 | 25 | 50 | |
| 3 | > 114 to 219 | 6,3 | 9,5/19,0 to 43,0/50,0 | 25 | 25 | 50 | |

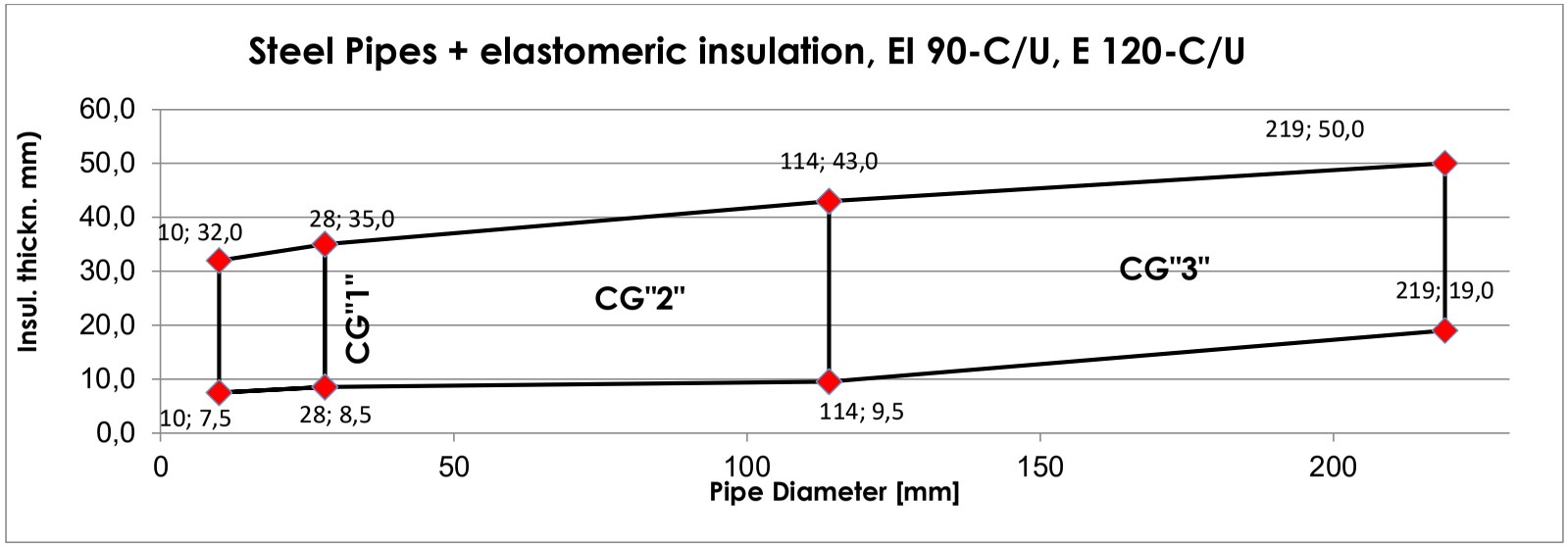

| | Material: stainless steel, steel, iron; seal type v) according 2.2.11.1<br>Approved pipe insulation material: see 2.2.11.2 | | | | | | |
|---|---|---|---|---|---|---|---|
| Layers | Pipe diameter Ø dc (mm) | Pipe wall thickness tc (mm) | Pipe insulation thickness (mm) | Separation a1 (mm) | Separation a2 (mm) | Separation a3 (mm) | Classification |
| 1 | 10 | 1,0 | 7,5 to 32,0 | 25 | 25 | 50 | **EI 120-C/U, E 120-C/U** |
| 1 | 28 | 1,0 | 8,5 to 35,0 | 25 | 25 | 50 | |

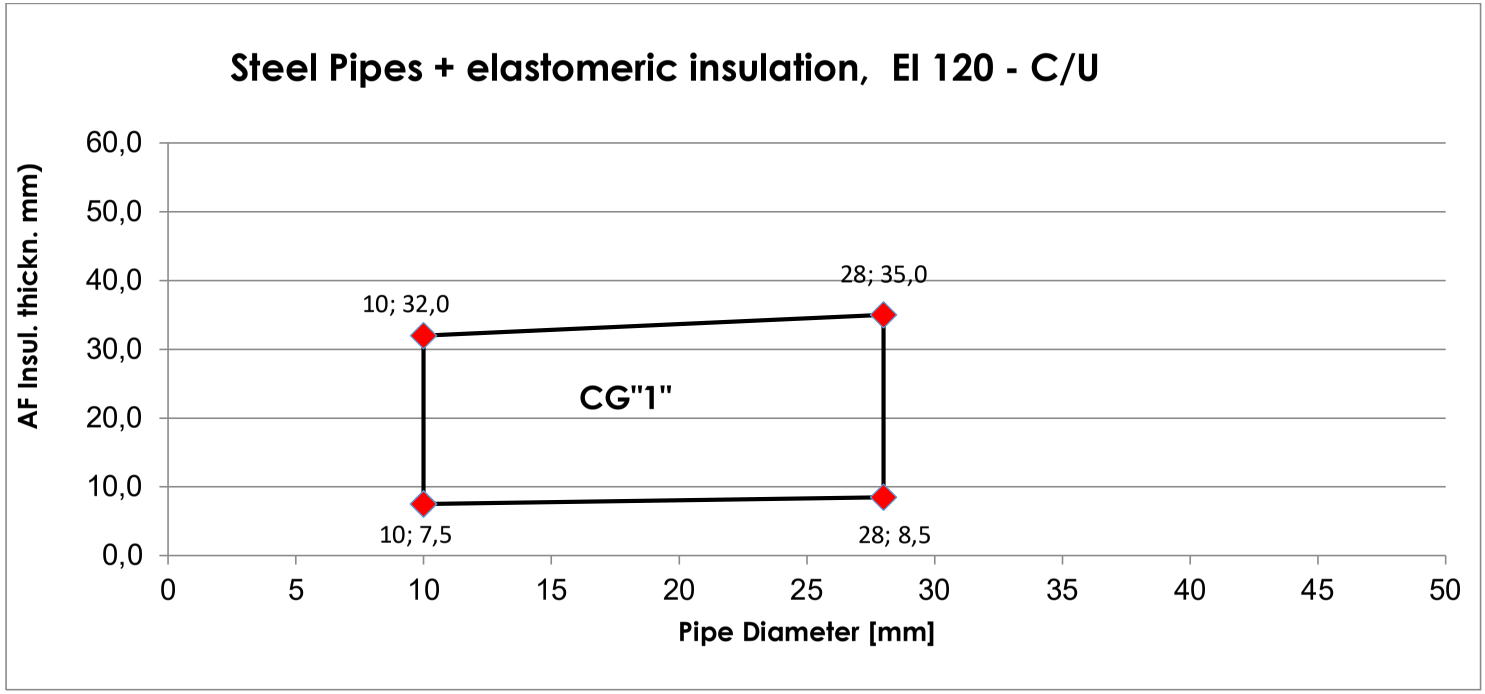

| Material: stainless steel, steel, iron; seal type v) according 2.2.11.1<br>Approved flexible, elastomeric pipe insulation ( CS) and additional pipe insulation (LI) (AP8 – refer to 2.1.4): for material see 2.2.11.2<br>Pipe designation: Geberit Mapress, distances: $S_8 \geq$ 100mm, $S_6 \geq$50mm (see 2.2) | | | | | | | |
|---|---|---|---|---|---|---|---|
| Layers | Pipe diameter Ø<br>dc (mm) | Pipe wall thickness tc (mm) | Pipe insulation thickness (mm) | Additional Pipe Insulation<br>Type | Additional Pipe Insulation<br>Thickness (mm) | Additional Pipe Insulation<br>Length(mm) | Classification |
| 2 | 66,7 | 1,5 | 17,5 to 40,0 | none | 0 | n.a. | **EI 90-C/U** |
| 2 | 66,7 | 1,5 | 9,5 to 40,0 | Elastomer see 2.2.11.2 | 19 | 250 | **EI 120-C/U** |
| 2 | 66,7 | 1,5 | 9,5 to 40,0 | Mineral wool, see 2.1.4 | 30 | 250 | **EI 120-C/U** |
| 2 | 108 | 2,0 | 18,0 – 42,5 | none | 0 | n.a. | **EI 30-C/U** |
| 2 | 108 | 2,0 | 18,0 – 42,5 | Elastomer see 2.2.11.2 | 19 | 250 | **EI 60-C/U** |
| 2 | 108 | 2,0 | 18,0 – 42,5 | Mineral wool, see 2.1.4 | 30 | 250 | **EI 120-C/U** |

## 2.3 Flexible walls according to 2.1 a) and rigid walls according to 2.1 b), minimum thickness 135 mm

**Penetration seal:**

Two 50 mm Hilti Firestop Boards CFS-CT B 1S[8] ($A_1$) or mineral wool boards according to Table 1 coated with Hilti Firestop Coating CFS-CT (A1), dry thickness of coating 0.7 mm on the outer side[9] , all cut edges of boards sealed with Hilti Firestop Acrylic Sealant CFS-S ACR, remaining gaps around cables / cable supports (trays, ladders etc.) and other services filled with Hilti Firestop Acrylic Sealant CFS-S ACR.

The boards have to be positioned flush to the surface of the building element on each side of the wall.

Maximum distance for 1st service support: 250 mm.

Maximum seal size: 1200 x 1200 mm (width x height).

Minimum distances in mm (for illustration see Annex 2.2):

$s_6$ = 0 (distance between metal pipes and seal edge)

$s_8$ = 0 (distance between metal pipes)

$s_9$ = 15 (distance between plastic pipes/pipe closure devices and seal edge)

$s_{11}$ = 0 (distance between plastic pipes/pipe closure devices)

$s_{12}$ = 0 (distance between metal pipes and plastic pipes/pipe closure devices)

$s_{13}$ = 96 (distance between cables/cable supports and metal pipes)

$s_{14}$ = 69 (distance between cables/cable supports and plastic pipes/pipe closure devices)

**Penetrating services (single, multiple or mixed):**

In addition to the services referred to in Annex 2.2 the following services with the classifications given below are covered:

### 2.3.1 Metal pipes

#### 2.3.1.1 Metal pipes with mineral wool insulation according to Table 3

Construction details: see Annex 2.2.5.1

##### 2.3.1.1.1 Steel pipes with mineral wool insulation according to Table 3

**Steel pipes (C) with continued insulation (D) – interrupted – C/U**

| Pipe diameter ($d_C$) [mm] | Pipe wall thickness ($t_C$) [mm] | Insulation thickness ($t_D$) [mm] | Classification |
|---|---|---|---|
| 32 -168.3 | 2.6/4.0 - 14.2[10] | ≥ 30 | EI 120-C/U |

| **Steel pipes (C) with local insulation (D) – interrupted – C/U** | | | | |
|---|---|---|---|---|
| Pipe | | Insulation | | Classification |
| diameter ($d_C$) [mm] | wall thickness ($t_C$) [mm] | thickness ($t_D$) [mm] | length ($L_D$) [mm] | |
| 32 | 2.6 - 14.2[10] | 30 | ≥ 500 | EI 120-C/U |
| 32 -168.3 | 2.6/4.0 - 14.2[10] | 30 | ≥ 800 | EI 120-C/U |
| 168.3 | 4.0 - 14.2 | 30 – 40 | ≥ 1000 | EI 120-C/U |
| The field of application given above for steel pipes is also valid for other metal pipes with lower heat conductivity than unalloyed steel and a melting point of minimum 1050°C, e.g. . low alloyed steel, cast iron, stainless steels, Ni alloys (NiCu, NrCr and NiMo alloys) | | | | |
| **2.3.1.1.2 Copper pipes with mineral wool insulation according to Table 3** | | | | |
| **Copper pipes (C) with continued insulation (D) – sustained** | | | | |
| Pipe diameter ($d_C$) [mm] | Pipe wall thickness ($t_C$) [mm] | Insulation thickness ($t_D$) [mm] | | Classification |
| 88.9 | 1.8 - 14.2 | ≥ 40 | | EI 120-C/U |
| **Copper pipes (C) with local insulation (D) – sustained** | | | | |
| Pipe | | Insulation | | Classification |
| diameter ($d_C$) [mm] | wall thickness ($t_C$) [mm] | thickness ($t_D$) [mm] | length ($L_D$) [mm] | |
| 88.9 | 1.8 - 14.2 | 40 | ≥ 800 | EI 120-C/U |
| The field of application given above for copper pipes is also valid for other metal pipes with lower heat conductivity than copper and a melting point of minimum 1100°C, e.g. unalloyed steel, low alloyed steel, cast iron, stainless steels, Ni alloys (NiCu, NiCr and NiMo alloys) and Ni. | | | | |

| 2.3.2 **Plastic pipes with Hilti Firestop Collar CFS-C** | | | | |
|---|---|---|---|---|
| Construction details: see Annex 2.2.7 | | | | |
| **2.3.2.1 PVC-U pipes (C) according to EN ISO 1452-2, EN ISO 15493, DIN 8061/8062 – U/C** | | | | |
| Pipe diameter ($d_c$) [mm] | Pipe wall thickness $t_c$ [mm] | Collar size ($A_3$) | No. of hooks | Classification |
| 90 | 4.5 | CFS-C 90/3” | 3 | EI 120-U/C |
| The results are also valid for PVC-U pipes according EN 1329-1[16] and EN 1453-1[17] as well as PVC-C pipes according 1566-1 | | | | |
| **2.3.2.2 PE pipes (C) according to EN ISO 15494, DIN 8074/8075** | | | | |
| Pipe diameter ($d_c$) [mm] | Pipe wall thickness $t_c$ [mm] | Collar size ($A_3$) | No. of hooks | Classification |
| 90 | 2.2 - 8.2 | CFS-C 90/3” | 3 | EI 120-U/C |

## 2.4 Rigid walls according to 2.1 c), minimum thickness 150 mm

**Penetration seal:**

Two 50 mm Hilti Firestop Boards CFS-CT B 1S[8] ($A_1$) or mineral wool boards according to Table 1 coated with Hilti Firestop Coating CFS-CT ($A_1$), dry thickness of coating 0.7 mm on the outer side[9], all cut edges of boards sealed with Hilti Firestop Acrylic Sealant CFS-S ACR, remaining gaps around cables / cable supports (trays, ladders etc.) and other services filled with Hilti Firestop Acrylic Sealant CFS-S ACR.

The boards have to be positioned flush to the surface of the building element on each side of the wall.

Maximum distance for 1st service support: 275 mm.

Maximum seal size: 1200 x 1200 mm (width x height).

Minimum distances in mm (for illustration see Annex 2.2):

$s_1$ = 0 (distance between cables/cable supports and seal edge

$s_2$ = 0 (distance between cable supports)

$s_3$ = 45 (distance between cables and upper seal edge)

$s_4$ = 0 (distance between cable supports and bottom seal edge)

$s_5$ = 50 (distance between cables and cable support above)

$s_6$ = 30 (distance between metal pipes and seal edge)

$s_7$ = 3 (distance between metal pipes and upper seal edge)

$s_8$ = 0 (distance between metal pipes)

$s_9$ = 55 (distance between plastic pipes/pipe closure devices and seal edge)

$s_{10}$ = 17 (distance between plastic pipes/pipe closure devices and upper seal edge)

$s_{11}$ = 0 (distance between plastic pipes/pipe closure devices)

$s_{12}$ = 68 (distance between metal pipes and plastic pipes/pipe closure devices)

$s_{13}$ = 76 (distance between cables/cable supports and metal pipes)

$s_{14}$ = 45 (distance between cables/cable supports and plastic pipes/pipe closure devices)

**Penetrating services (single, multiple or mixed):**

In addition to the services referred to in Annex 2.2 and Annex 2.3 the following services with the classifications given below are covered:

| 2.4.1 **Cables** | |
|---|---|
| Construction details: see drawings in Annex 2.2.2; | Classification |
| Additional protection according to 1.2. | $AP_1$ |
| All sheathed cable types currently and commonly used in building practice in Europe (e.g. power, control, signal, telecommunication, data, optical fibre cables, with or without cable supports, with a diameter of : maximum Ø 80 mm | EI 60 |
| Non-sheathed cables (wires) currently and commonly used in building practice in Europe, with or without cable supports, with a diameter of : maximum Ø 17 mm | EI 90 |
| Tied cable bundle, maximum diameter of single cable 21 mm, with or without cable supports. Maximum Ø 100 mm | EI 60 |

| 2.4.2 **Small conduits and tubes** | |
|---|---|
| Construction details: see drawings in Annex 2.2.2; | Classification |
| additional protection according to 1.2. | $AP_1$ |
| Ø ≤ 16 mm, wall thickness ≥ 1 mm, arranged linear, with or without cables, with or without cable supports | |
| Plastic conduits and tubes | EI 120-U/C |
| Steel conduits and tubes | EI 120-C/U |

| 2.4.3 **Metal pipes with mineral wool insulation according to Table 3** | | | |
|---|---|---|---|
| Construction details: see Annex 2.2.5.1 | | | |
| **2.4.3.1 Steel pipes with mineral wool insulation according to Table 3** | | | |
| **Steel pipes (C) with continued insulation (D) – interrupted – C/U** | | | |
| Pipe diameter ($d_C$) [mm] | Pipe wall thickness ($t_C$) [mm] | Insulation thickness ($t_D$) [mm] | Classification |
| 32 | 4.0 - 14.2[10] | ≥ 20 | EI 120-C/U |
| 32 - 114.3 | 3.6 - 14.2[10] | ≥ 30 | EI 120-C/U |

| **Steel pipes (C) with local insulation (D) – interrupted – C/U** | | | | |
|---|---|---|---|---|
| Pipe | | Insulation | | Classification |
| diameter ($d_C$) [mm] | wall thickness ($t_C$) [mm] | thickness ($t_D$) [mm] | length ($L_D$) [mm] | |
| 32 | 4.0 - 14.2[10] | 20 | ≥ 500 | EI 120-C/U |
| 114.3 | 3.6 - 14.2 | 30 | ≥ 500 | EI 120-C/U |
| The field of application given above for steel pipes is also valid for other metal pipes with lower heat conductivity than unalloyed steel and a melting point of minimum 1050°C, e.g. low alloyed steel, cast iron, stainless steels, Ni alloys (NiCu, NrCr and NiMo alloys) | | | | |
| **2.4.3.2 Copper pipes with mineral wool insulation according to Table 3** | | | | |
| **Copper pipes (C) with continued insulation (D) – sustained – C/U** | | | | |
| Pipe diameter ($d_C$) [mm] | Pipe wall thickness ($t_C$) [mm] | Insulation thickness ($t_D$) [mm] | | Classification |
| 42 | 1.5 - 14.2[10] | ≥ 20 | | EI 120-C/U |
| **Copper pipes (C) with local insulation (D) – sustained – C/U** | | | | |
| Pipe | | Insulation | | Classification |
| diameter ($d_C$) [mm] | wall thickness ($t_C$) [mm] | thickness ($t_D$) [mm] | length ($L_D$) [mm] | |
| 42 | 1.5 - 14.2[10] | 40 | ≥ 500 | EI 120-C/U |
| The field of application given above for copper pipes is also valid for other metal pipes with lower heat conductivity than copper and a melting point of minimum 1100°C, e.g. unalloyed steel, low alloyed steel, cast iron, stainless steels, Ni alloys (NiCu, NiCr and NiMo alloys) and Ni. | | | | |

| 2.4.4 **Plastic pipes with Hilti Firestop Collar CFS-C** | | | | |
|---|---|---|---|---|
| Construction details: see Annex 2.2.7 | | | | |
| **PVC-U pipes (C) according to EN ISO 1452-2, EN ISO 15493, DIN 8061/8062 – U/C** | | | | |
| Pipe diameter ($d_c$) [mm] | Pipe wall thickness $t_c$ [mm] | Collar size ($A_3$) | No. of hooks | Classification |
| 32 | 1.9 | CFS-C 50/1.5" | 2 | EI 120-U/C |
| 110 | 2.2 – 8.2 | CFS-C 110/4" | 4 | EI 120-U/C |
| The results are also valid for PVC-U pipes according EN 1329-1[16] and EN 1453-1[17] as well as PVC-pipes according EN 1566-1 | | | | |

## 2.5 Rigid walls according to 2.2 d), minimum thickness 150 mm

**Penetration seal:**

Two 50 mm Hilti Firestop Boards CFS-CT B 1S[8] ($A_1$) or mineral wool boards according to Table 1 coated with Hilti Firestop Coating CFS-CT ($A_1$), dry thickness of coating 0.7 mm on the outer side[9], all cut edges of boards sealed with Hilti Firestop Acrylic Sealant CFS-S ACR, remaining gaps around cables / cable supports (trays, ladders etc.) and other services filled with Hilti Firestop Acrylic Sealant CFS-S ACR.

The boards have to be positioned flush to the surface of the building element on each side of the wall.

Maximum distance for 1st service support: 250 mm.

Maximum seal size: 1200 x 1200 mm (width x height).

Minimum distances in mm metal pipe penetration seal:

$s_6$, $s_9$ = 0 (distance between pipes and lateral seal edge

$s_7$, $s_{10}$ = 45 (distance between pipes and upper seal edge)

$s_8$, $s_{11}$, $s_{12}$ = 30 (distance between pipes)

Minimum distances in mm cable penetration seal:

$s_1$ = 10 (distance between cables/cable supports and seal edge)

$s_2$ = 70 (distance between cable supports)

$s_3$ = 48 (distance between cables and upper seal edge)

$s_4$ = 0 (distance between cable supports and bottom seal edge)

$s_5$ = 80 (distance between cables and cable support above)

For illustration of distances see Annex 2.2

**Penetrating services (single or multiple):**

In addition to the services referred to in Annex 2.2, Annex 2.3 and Annex 2.4 the following services with the classifications given below are covered:

| 2.5.1 **Cables** | | |
|---|---|---|
| Construction details: see Annex 2.2.2 | | |
| | Classification | |
| Additional protection according to 1. 2: | $AP_3$ | $AP_4$ |
| All sheathed cable types currently and commonly used in building practice in Europe (e.g. power, control, signal, telecommunication, data, optical fibre cables, with or without cable supports, with a diameter of: | | |
| Maximum Ø 21 mm | EI 120 | EI 120 |
| 21 ≤ Ø ≤ 50 mm | EI 60 | EI 90 |
| 50 ≤ Ø ≤ 80 mm | EI 60 | EI 90 |
| Non-sheathed cables (wires) currently and commonly used in building practice in Europe, with or without cable supports, with a diameter of: | | |
| Maximum Ø 17 mm | EI 45 | - |
| Maximum Ø 24 mm | EI 45 | - |
| Tied cable bundle, maximum diameter of single cable 21 mm, with or without cable supports | | |
| Maximum Ø 100 mm | EI 90 | EI 120 |

| 2.5.2 **Small conduits and tubes** | | |
|---|---|---|
| Construction details: see Annex 2.2.2 | | |
| | Classification | |
| Ø ≤ 16 mm, wall thickness ≥ 1 mm, arranged linear, with or without cables, with or without cable supports | | |
| Additional protection according to 1.2: | $AP_3$ | $AP_4$ |
| Plastic conduits and tubes | EI 120-U/C | EI 120-U/C |
| Steel conduits and tubes | EI 120-C/U | EI 120-C/U |

## 2.5.3 Metal pipes with foamed elastomeric insulation according Table 4 and Hilti Firestop Bandage CFS-B

Construction details (for symbols and abbreviations see Annex 4):

For specification of Armaflex AF see Table 4.

For specification of the foamed elastomeric insulation material to be used see Table 4.

Two layers of Firestop Bandage CFS-B ($A_2$) wrapped around the pipe insulation, on each side of the seal. The bandage is positioned with half of its width (62.5 mm) within the seal (central marking line at the surface of the seal) and outside the seal fixed with wire.

No additional protection.

Continued insulation, sustained (CS)

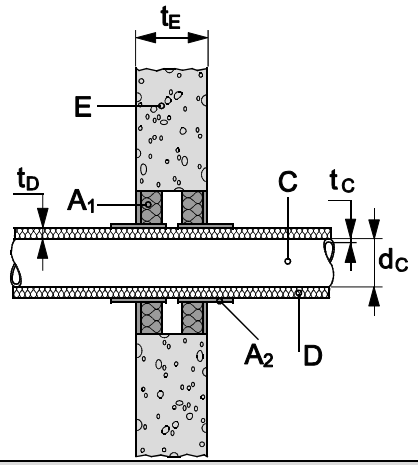


Local insulation, sustained (LS)

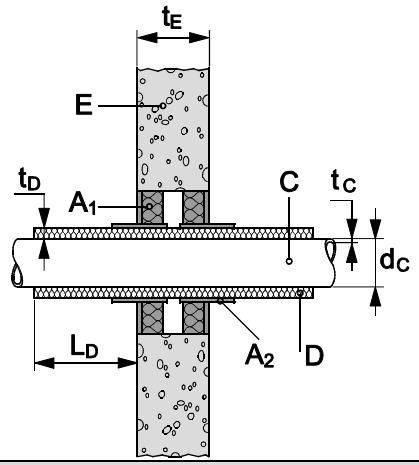


### 2.5.3.1 Steel pipes with foamed elastomeric insulation according Table 4 and Hilti Firestop Bandage CFS-B

**Steel pipes (C) with continued insulation (D) – sustained – C/U**

| Pipe diameter ($d_C$) [mm] | Pipe wall thickness ($t_C$) [mm] | Insulation thickness ($t_D$) [mm] | Classification |
|---|---|---|---|
| 60.3 | 3.6 - 14.2 | 21.5 - 39 | EI 90-C/U |
| 60.3 - 114.3 | 3.6 - 14.2 | 21.5 - 39 | EI 60-C/U |
| 60.3 | 3.6 - 14.2 | 39 | EI 120-C/U |
| 114.3 | 3.6 - 14.2 | 43 | EI 90-C/U |

| **Steel pipes (C) with local insulation (D) – sustained – C/U** | | | | |
|---|---|---|---|---|
| Pipe | | Insulation | | Classification |
| diameter ($d_C$) [mm] | wall thickness ($t_C$) [mm] | thickness ($t_D$) [mm] | length ($L_D$) [mm] | |
| 60.3 | 3.6 - 14.2 | 21.5 - 39 | ≥ 500 | EI 90-C/U |
| 60.3 – 114.3 | 3.6 - 14.2 | 21.5 - 39 | ≥ 500 | EI 60-C/U |
| 60.3 | 3.6 - 14.2 | 39 | ≥ 500 | EI 120-C/U |
| 114.3 | 3.6 - 14.2 | 43 | ≥ 500 | EI 90-C/U |
| The field of application given above for steel pipes is also valid for other metal pipes with lower heat conductivity than unalloyed steel and a melting point of minimum 1050°C, e.g. low alloyed steel, cast iron, stainless steels, Ni alloys (NiCu, NrCr and NiMo alloys) | | | | |
| **2.5.3.2 Stainless steel pipes with foamed elastomeric insulation according Table 4 and Hilti Firestop Bandage CFS-B** | | | | |
| **Stainless steel pipes (C) with continued insulation (D) – sustained – C/U** | | | | |
| Pipe diameter ($d_C$) [mm] | Pipe wall thickness ($t_C$) [mm] | Insulation thickness ($t_D$) [mm] | | Classification |
| 60.3 | 2.0 - 14.2 | 21.5 - 39 | | EI 90-C/U |
| 60.3 | 2.0 - 14.2 | 39 | | EI 120-C/U |
| **Stainless steel pipes (C) with local insulation (D) – sustained – C/U** | | | | |
| Pipe | | Insulation | | Classification |
| diameter ($d_C$) [mm] | wall thickness ($t_C$) [mm] | thickness ($t_D$) [mm] | length ($L_D$) [mm] | |
| 60.3 | 2.0 - 14.2 | 21.5 - 39 | ≥ 500 | EI 90-C/U |
| 60.3 | 2.0 - 14.2 | 39 | ≥ 500 | EI 120-C/U |

| 2.5.3.3 Copper pipes with foamed elastomeric insulation according Table 4 and Hilti Firestop Bandage CFS-B | | | | |
|---|---|---|---|---|
| **Copper pipes (C) with continued insulation (D) – sustained – C/U** | | | | |
| Pipe diameter ($d_C$) [mm] | Pipe wall thickness ($t_C$) [mm] | Insulation thickness ($t_D$) [mm] | | Classification |
| 28 | 1.0 - 14.2[10] | 19 - 35 | | EI 60-C/U |
| 28 | 1.0 - 14.2[10] | 35 | | EI 120-C/U |
| **Copper pipes (C) with local insulation (D) – sustained – C/U** | | | | |
| Insulation | | Pipe | | Classification |
| Pipe | | Insulation | | Classification |
| diameter ($d_C$) [mm] | wall thickness ($t_C$) [mm] | thickness ($t_D$) [mm] | length ($L_D$) [mm] | |
| 28 | 1.0 - 14.2[10] | 19 - 35 | ≥ 500 | EI 60-C/U |
| 28 | 1.0 - 14.2[10] | 35 | ≥ 500 | EI 120-C/U |
| The field of application given above for copper pipes is also valid for other metal pipes with lower heat conductivity than copper and a melting point of minimum 1100°C, e.g. unalloyed steel, low alloyed steel, cast iron, stainless steels, Ni alloys (NiCu, NiCr and NiMo alloys) and Ni. | | | | |

## 2.6 Rigid floors according to 1.2 e), minimum thickness 150 mm

**Penetration seal:**

Two 50 mm Hilti Firestop Boards CFS-CT B 1S[8] ($A_1$) or mineral wool boards according to Table 1 coated with Hilti Firestop Coating CFS-CT ($A_1$), dry thickness of coating 0.7 mm on the outer side[9], all cut edges of boards sealed with Hilti Firestop Acrylic Sealant CFS-S ACR, remaining gaps around cables / cable supports (trays, ladders etc.) and other services filled with Hilti Firestop Acrylic Sealant CFS-S ACR.

The boards have to be positioned flush to the surface of the building element on each side of the floor.

Maximum distance for 1st service support: 100 mm.

Maximum seal size: see Figure below.

Minimum distances in mm:

| | |
|---|---|
| $s_1$ = 0 | (distance between cables/cable supports and seal edge) |
| $s_2$ = 0 | (distance between cable supports) |
| $s_3$ = 0 | (distance between cables and upper seal edge) |
| $s_4$ = 0 | (distance between cable supports and bottom seal edge) |
| $s_5$ = 50 | (distance between cables and cable support above) |
| $s_6$ = 10 | (distance between metal pipes and seal edge) |
| $s_8$ = 20 | (distance between metal pipes) |
| $s_9$ = 0 | (distance between plastic pipes/pipe closure devices and seal edge) |
| $s_{11}$ = 0 | (distance between plastic pipes/pipe closure devices) |
| $s_{12}$ = 30 | (distance between metal pipes and plastic pipes/pipe closure devices) |
| $s_{13}$ = 30 | (distance between cables/cable supports and metal pipes) |
| $s_{14}$ = 32 | (distance between cables/cable supports and plastic pipes / pipe closure devices) |

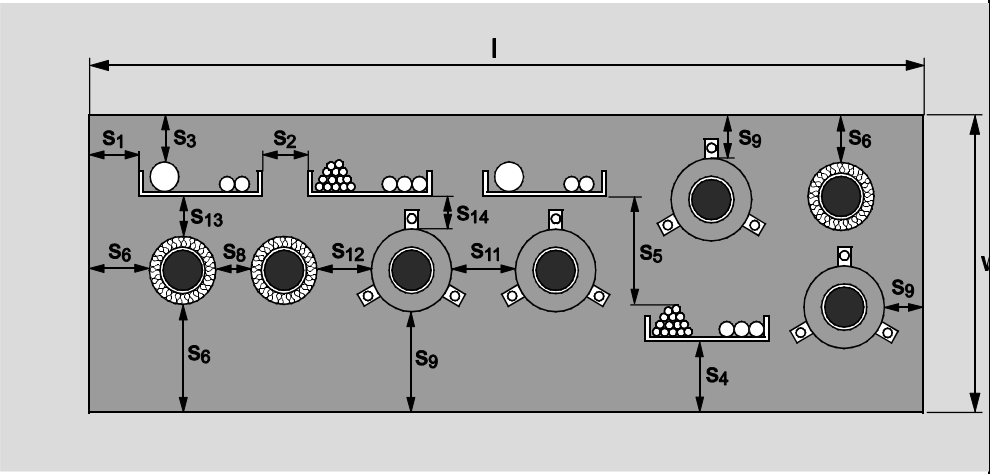

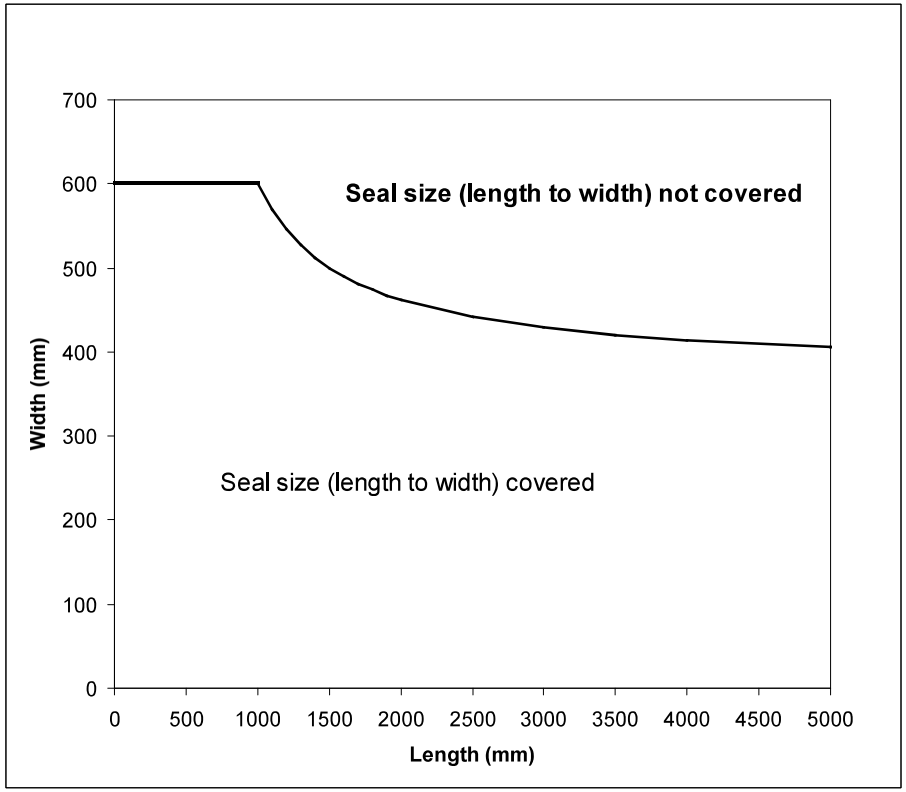


Seal sizes covered in all floor applications (length x width)

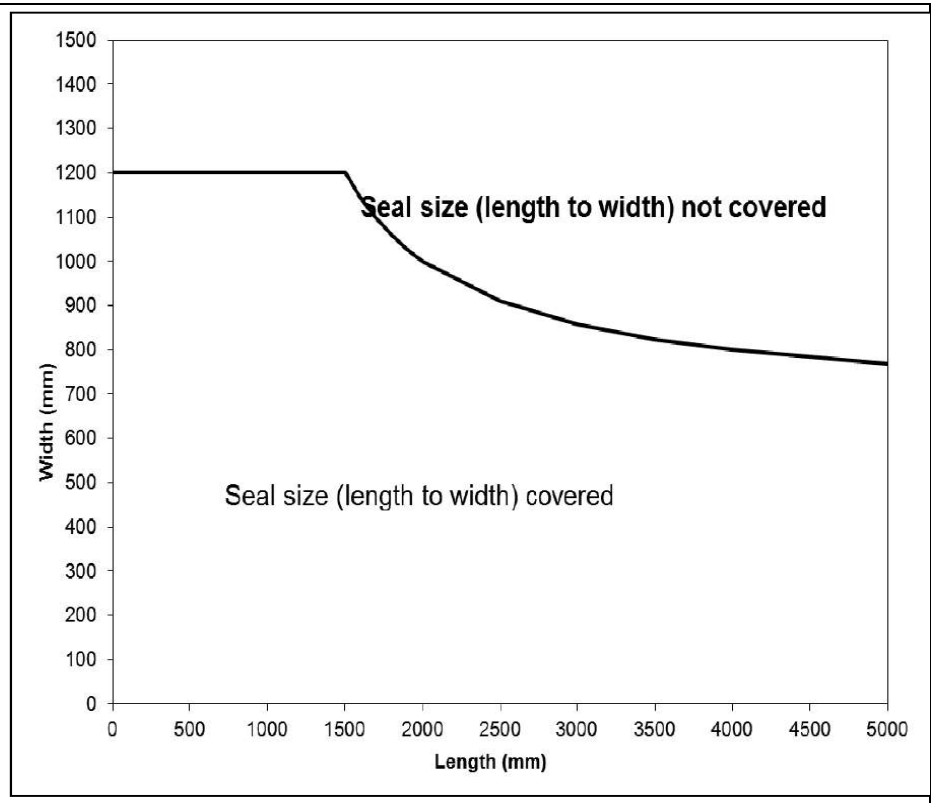


Seal sizes covered with additional supporting construction in all floor applications (length x width)

**Penetrating services: (single, multiple or mixed)**

| 2.6.1 **Blank seal (no services) *** | |
|---|---|
| * If services are added later on in a blank seal only the services listed in the tables below may be added that fulfil the required classification<br><br>Construction details (for symbols and abbreviations see Annex 4): | Classification |
| Maximum size 600 x 1000 mm (width x length)<br> 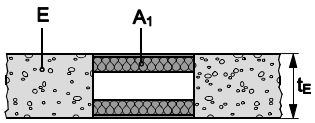 <br><br> 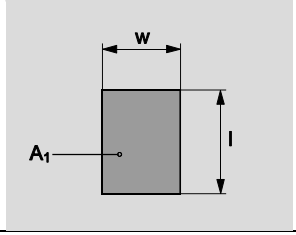 <br> | EI 180 |
| Maximum size 1200 x 1500 mm (width x length)<br> 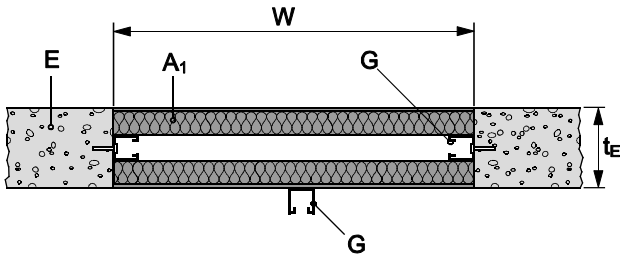 <br><br> 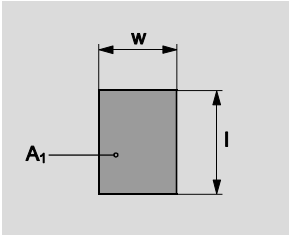 <br><br>With additional supporting construction: Two steel Hilti MQ-41/3 profiles between the two board layers, placed in longitudinal direction in the floor opening (fixed every 450mm with anchor bolts diameter 6mm, length 60mm) and a steel Hilti MQ-41/3 profile below the lower board layer placed in longitudinal direction of the seal (fixed on the floor at both ends with anchor bolts diameter 6mm, length 60mm). | EI 90 |

## 2.6.2 **Cables**

(single, multiple or mixed)

Construction details (for symbols and abbreviations see Annex 4):

Additional protection $AP_2$ or $AP_5$ according to 1.2 may be used. $AP_5$ is illustrated below.

$AP_2$: cables/small conduits coated with Hilti Firestop Coating CFS-CT on both sides of seal over a length of the cables/small conduits of 200 mm from the surface of the seal, thickness 1 mm.

$AP_5$: Mineral wool mat according to Table 2, wrapped around cables /cable support (trays, ladders) on upper side of seal, Al-faced side outside, fixed with wire, width (length along the cables/small conduits) 200 mm, thickness 30 mm.

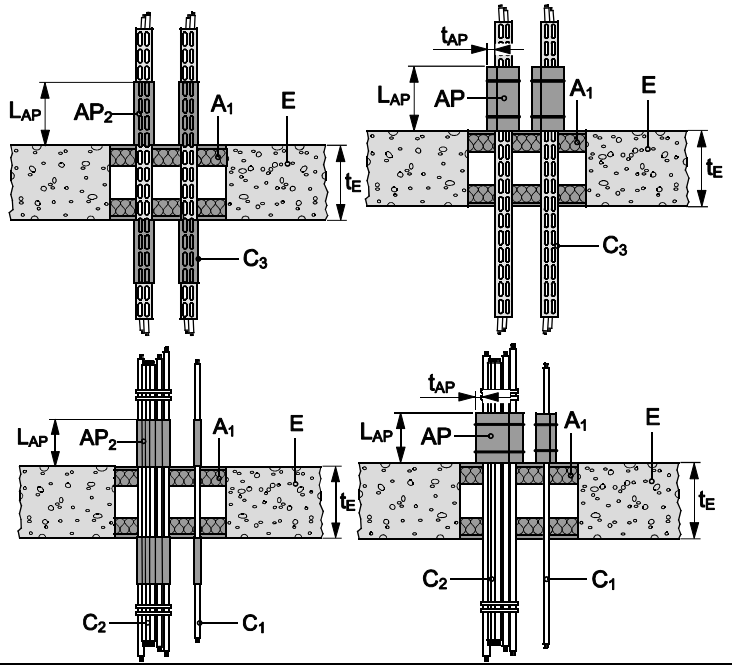


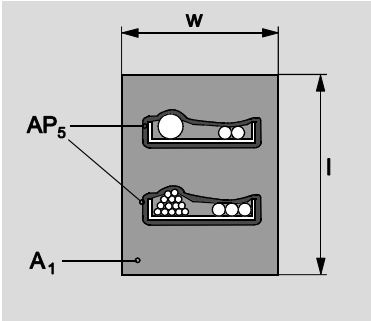


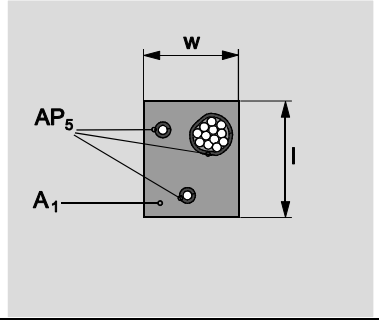

| | Classification | | |
|---|---|---|---|
| | with cable support ($C_3$) | without cable support ($C_1$, $C_2$) | with or without cable support |
| Additional protection: | $AP_2$ | | $AP_5$ |
| All sheathed cable types currently and commonly used in building practice in Europe (e.g. power, control, signal, telecommunication, data, optical fibre cables, with a diameter of: | | | |
| Maximum Ø 21 mm | EI 90 | EI 120 | EI 120 |
| 21 ≤ Ø ≤ 50 mm | EI 60 | EI 60 | EI 120 |
| 50 ≤ Ø ≤ 80 mm | EI 60 | EI 60 | EI 120 |
| Non-sheathed cables (wires) currently and commonly used in building practice in Europe, with a diameter of: | | | |
| Maximum Ø 24 mm | EI 60 | EI 60 | - |
| Tied cable bundle, maximum diameter of single cable 21 mm | | | |
| Maximum Ø 100 mm | EI 90 | EI 120 | EI 120 |

| 2.6.3 **Small conduits and tubes** (single, multiple or mixed) | | | |
|---|---|---|---|
| Construction details: see Annex 2.6.2 | | | |
| | Classification | | |
| | with cable support ($C_3$) | without cable support ($C_1$, $C_2$) | with or without cable support |
| Additional protection: | $AP_2$ | | $AP_5$ |
| Ø ≤ 16 mm, wall thickness ≥ 1 mm, arranged linear, with or without cables | | | |
| Plastic conduits and tubes | EI 90-U/C | EI 120-U/C | EI 90-U/C |
| Steel conduits and tubes | EI 90-C/U | EI 120-C/U | EI 90-C/U |

### 2.6.3.1 3 plastic conduits in 1 Hilti Firestop Collar CFS-C P – U/C

With and without cables

Construction details (for symbols and abbreviations see Annex 4):

Hilti Firestop Collar CFS-C P ($A_3$) is installed on the bottom side of the seal, fixed by threaded rods, washers and nuts as specified in Annex 1.2.

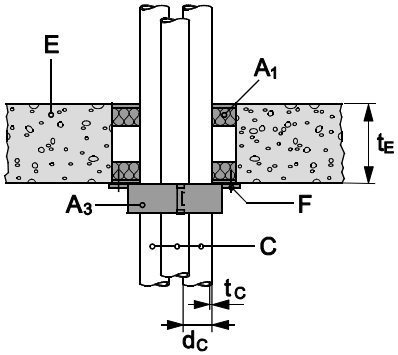


| Pipe diameter ($d_c$) [mm] | Pipe wall thickness $t_c$ [mm] | Pipe material / standard | Collar size ($A_3$) | No. of hooks | Classification |
|---|---|---|---|---|---|
| 16 | 1.0 | PVC, | CFS-C P 63/2” | 3 | EI 90-U/C |
| 25 | 1.5 | PVC | | | |
| 35 | 2 | Polyolefin | | | |

## 2.6.4 Metal pipes

### 2.6.4.1 Metal pipes with mineral wool insulation according to Table 3

Construction details (for symbols and abbreviations see Annex 4):

Additional protection $AP_8$ according to 1.2 may be used.

$AP_8$: Mineral wool mat according to Table 2, wrapped on both sides of the seal around the pipe insulation, fixed with wire, length along the pipe 250 mm, thickness 40 mm.

Continued insulation, interrupted (CI)

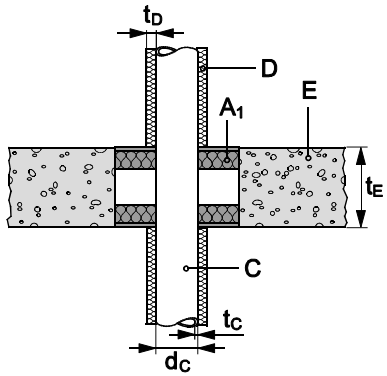


Local insulation, interrupted (LI)

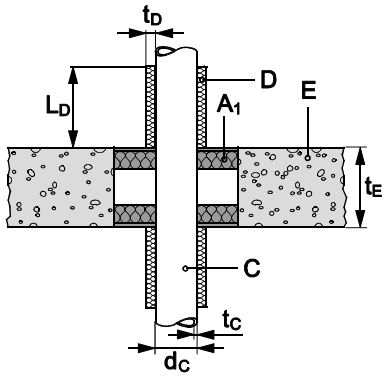


Continued insulation, sustained (CS)

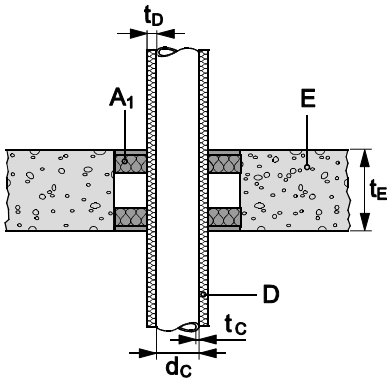


Local insulation, sustained (LS)

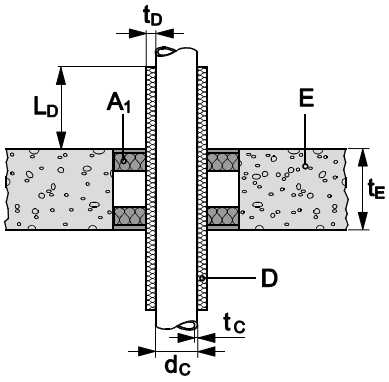

| – Continued insulation, sustained (CS) with additional protection $AP_8$ | – Continued insulation, interrupted (CI) with additional protection $AP_8$ | – Local insulation, sustained (LS) with additional protection $AP_8$ | Local insulation, interrupted (LI) with additional protection $AP_8$ |
|---|---|---|---|
| 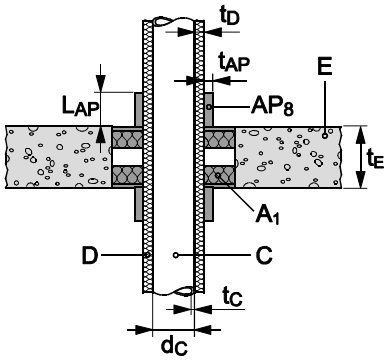  | 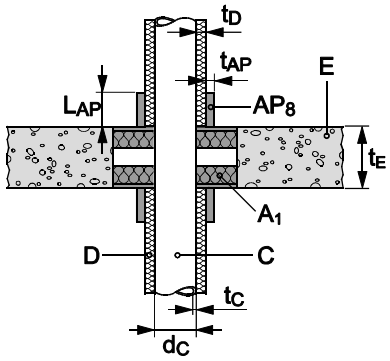  | 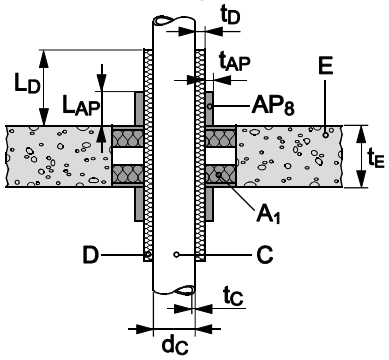  | 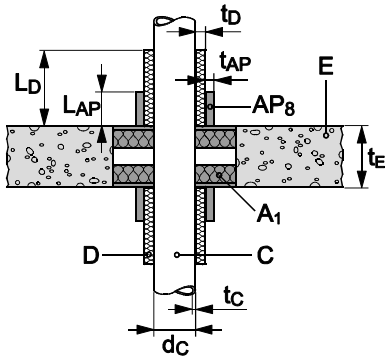  |

**2.6.4.1.1 Steel pipes with mineral wool insulation according to Table 3**

**Steel pipes (C) with continued insulation (D) – sustained – C/U**

| Pipe diameter ($d_C$) [mm] | Pipe wall thickness ($t_C$) [mm] | Insulation thickness ($t_D$) [mm] | Classification |
|---|---|---|---|
| 48.3 | 1.6 - 14.2[10] | ≥ 20 | EI 180-C/U |
| 114.3 | 3.6 | ≥ 40 | EI 120-C/U |

**Steel pipes (C) with continued insulation (D) – sustained – U/C**

| Pipe diameter ($d_C$) [mm] | Pipe wall thickness ($t_C$) [mm] | Insulation thickness ($t_D$) [mm] | Classification | |
|---|---|---|---|---|
| | | Additional protection according 1.2 | - | $AP_8$ |
| 114.3 | 2.0 – 14.2 | ≥ 30 | EI 120-U/C | - |
| 114.3 – 159 | 2.0/2.6 - 14.2[11] | ≥ 40 | EI 120-U/C | - |
| 159 – 323.9 | 2.6/4.0 - 14.2[12] | ≥ 40 | EI 90-U/C | EI 120-U/C |

| **Steel pipes (C) with continued insulation (D) – interrupted – C/U** | | | |
|---|---|---|---|
| Pipe diameter ($d_C$) [mm] | Pipe wall thickness ($t_C$) [mm] | Insulation thickness ($t_D$) [mm] | Classification |
| 26.9 | 1.4 – 14.2[10] | ≥ 40 | EI 180-C/U |
| 32 | 4.0 - 14.2[10] | ≥ 20 | EI 120-C/U |
| 48.3 | 1.6 – 14.2[10] | ≥ 20 | EI 180-C/U |
| 34 - 168.3 | 2.6 - 14.2[10] | ≥ 30 | EI 120-C/U |

| **Steel pipes (C) with continued insulation (D) – interrupted – U/C** | | | | |
|---|---|---|---|---|
| Pipe diameter ($d_C$) [mm] | Pipe wall thickness ($t_C$) [mm] | Insulation thickness ($t_D$) [mm] | Classification | |
| Additional protection according 1.2 | | | - | $AP_8$ |
| 114.3 | 2.0 – 14.2 | ≥ 30 | EI 120-U/C | - |
| 114.3 – 159 | 2.0/2.6 - 14.2[11] | ≥ 40 | EI 120-U/C | - |
| 159 – 323.9 | 2.6/4.0 - 14.2[12] | ≥ 40 | EI 90-U/C | EI 120-U/C |

| **Steel pipes (C) with local insulation (D) – sustained – C/U** | | | | |
|---|---|---|---|---|
| Pipe | | Insulation | | Classification |
| diameter ($d_C$) [mm] | wall thickness ($t_C$) [mm] | thickness ($t_D$) [mm] | length ($L_D$) [mm] | |
| 48.3 | 1.6 - 14.2[10] | 20 | ≥ 450 | EI 180-C/U |
| 114.3 | 3.6 | 40 | ≥ 500 | EI 120-C/U |

| **Steel pipes (C) with local insulation (D) – sustained – U/C** | | | | | |
|---|---|---|---|---|---|
| Pipe | | Insulation | | Classification | |
| diameter ($d_C$) [mm] | wall thickness ($t_C$) [mm] | thickness ($t_D$) [mm] | length ($L_D$) [mm] | | |
| Additional protection according 1.2 | | | | - | $AP_8$ |
| 114.3 | 2.0 – 14.2 | 30 – 40 | ≥ 500 | EI 120-U/C | - |
| 114.3 – 159 | 2.0/2.6 - 14.2[11] | 40 | ≥ 500 | EI 90-U/C | - |
| 114.3 – 159 | 2.0/2.6 - 14.2[11] | 40 | ≥ 1000 | EI 120-U/C | - |
| 159 – 323.9 | 2.6/4.0 - 14.2[12] | 40 | ≥ 1000 | EI 60-U/C | EI 90-U/C |

| **Steel pipes (C) with local insulation (D) – interrupted – C/U** | | | | | |
|---|---|---|---|---|---|
| Pipe | | Insulation | | Classification | |
| diameter ($d_C$) [mm] | wall thickness ($t_C$) [mm] | thickness ($t_D$) [mm] | length ($L_D$) [mm] | | |
| 26.9 | 1.4 – 14.2[10] | 40 | ≥ 500 | EI 180-C/U | |
| 32 | 4.0 - 14.2[10] | 20 | ≥ 500 | EI 120-C/U | |
| 48.3 | 1.6 – 14.2[10] | 20 | ≥ 500 | EI 180-C/U | |
| 32 - 114.3 | 2.6 - 14.2[10] | 30 | ≥ 500 | EI 120-C/U | |
| 32 - 168.3 | 2.6 - 14.2[10] | 30 | ≥ 800 | EI 120-C/U | |
| 168.3 | 4.0 - 14.2 | 30 - 40 | ≥ 1000 | EI 120-C/U | |
| **Steel pipes (C) with local insulation (D) – interrupted – U/C** | | | | | |
| Pipe | | Insulation | | Classification | |
| diameter ($d_C$) [mm] | wall thickness ($t_C$) [mm] | thickness ($t_D$) [mm] | length ($L_D$) [mm] | | |
| Additional protection according 1.2 | | | | - | $AP_8$ |
| 114.3 | 2.0 – 14.2 | 30 – 40 | ≥ 500 | EI 120-U/C | - |
| 114.3 – 159 | 2.0/2.6 - 14.2[11] | 40 | ≥ 500 | EI 90-U/C | - |
| 114.3 – 159 | 2.0/2.6 - 14.2[11] | 40 | ≥ 1000 | EI 120-U/C | - |
| 159 – 323.9 | 2.6/4.0 - 14.2[12] | 40 | ≥ 1000 | EI 60-U/C | EI 90-U/C |
| The field of application given above for steel pipes is also valid for other metal pipes with lower heat conductivity than unalloyed steel and a melting point of minimum 1050°C, e.g. low alloyed steel, cast iron, stainless steels, Ni alloys (NiCu, NrCr and NiMo alloys) | | | | | |

| 2.6.4.1.2 Metal pipes with mineral wool insulation according to Table 3 | | | |
|---|---|---|---|
| **Copper pipes (C) with continued insulation (D) – sustained – C/U** | | | |
| Pipe diameter ($d_C$) [mm] | Pipe wall thickness ($t_C$) [mm] | Insulation thickness ($t_D$) [mm] | Classification |
| 28 – 42 | 1.0/1.5 - 14.2[10,13] | ≥ 20 | EI 120-C/U |
| 88.9 | 1.8 - 14.2 | ≥ 40 | EI 120-C/U |
| **Copper pipes (C) with continued insulation (D) – sustained – U/C** | | | |
| Pipe | | Insulation | Classification |
| diameter ($d_C$) [mm] | wall thickness ($t_C$) [mm] | thickness ($t_D$) [mm] | |
| 10 - 40 | 1.0/1.5 - 14.2[10,14] | ≥ 20 | EI 120-U/C |
| 40 | 1.5 – 14.2[10] | ≥ 40 | EI 120-U/C |
| 40 – 88.9 | 1.5/2.0 – 14.2[10,15] | ≥ 40 | EI 90-U/C |
| **Copper pipes (C) with continued insulation (D) – interrupted – C/U** | | | |
| Pipe diameter ($d_C$) [mm] | Pipe wall thickness ($t_C$) [mm] | Insulation thickness ($t_D$) [mm] | Classification |
| 28 | 1.0 – 14.2[10] | ≥ 20 | EI 120-C/U |
| 28 – 42 | 1.0/1.5 - 14.2[10,13] | ≥ 40 | EI 120-C/U |
| 42 | 1.5 - 14.2[10] | ≥ 20 | EI 120-C/U |
| **Copper pipes (C) with continued insulation (D) – interrupted – U/C** | | | |
| Pipe | | Insulation | Classification |
| diameter ($d_C$) [mm] | wall thickness ($t_C$) [mm] | thickness ($t_D$) [mm] | |
| 10 - 40 | 1.0/1.5 - 14.2[10,14] | ≥ 20 | EI 120-U/C |
| 40 – 88.9 | 1.5/2.0 – 14.2[10,15] | ≥ 40 | EI 120-U/C |

| **Copper pipes (C) with local insulation (D) – sustained – C/U** | | | | | |
|---|---|---|---|---|---|
| Pipe | | Insulation | | Classification | |
| diameter ($d_C$) [mm] | wall thickness ($t_C$) [mm] | thickness ($t_D$) [mm] | length ($L_D$) [mm] | | |
| 28 – 42 | 1.0/1.5 - 14.2[10,13] | 20 | ≥ 450 | EI 120-C/U | |
| 42 | 1.5 - 14.2[10] | 20 – 40 | ≥ 800 | EI 120-C/U | |
| 88.9 | 1.8 - 14.2 | 40 | ≥ 800 | EI 120-C/U | |
| **Copper pipes (C) with local insulation (D) – sustained – U/C** | | | | | |
| Pipe | | Insulation | | Classification | |
| diameter ($d_C$) [mm] | wall thickness ($t_C$) [mm] | thickness ($t_D$) [mm] | length ($L_D$) [mm] | | |
| Additional protection according 1.2 | | | | - | $AP_8$ |
| 10 - 40 | 1.0/1.5 - 14.2[10,14] | 20 | ≥ 500 | EI 120-U/C | - |
| 40 | 1.5 – 14.2[10] | 40 | ≥ 1000 | EI 120-U/C | - |
| 40 – 88.9 | 1.5/2.0 – 14.2[10,15] | 40 | ≥ 1000 | EI 60-U/C | EI 90-U/C |
| **Copper pipes (C) with local insulation (D) – interrupted – C/U** | | | | | |
| Pipe | | Insulation | | Classification | |
| diameter ($d_C$) [mm] | wall thickness ($t_C$) [mm] | thickness ($t_D$) [mm] | length ($L_D$) [mm] | | |
| 28 | 1.0 – 14.2[10] | 20 | ≥ 500 | EI 120-C/U | |
| 42 | 1.5 - 14.2[10] | 20 | ≥ 500 | EI 120-C/U | |
| 42 | 1.5 - 14.2[10] | 40 | ≥ 800 | EI 120-C/U | |
| **Copper pipes (C) with local insulation (D) – interrupted – U/C** | | | | | |
| Pipe | | Insulation | | Classification | |
| diameter ($d_C$) [mm] | wall thickness ($t_C$) [mm] | thickness ($t_D$) [mm] | length ($L_D$) [mm] | | |
| 10 - 40 | 1.0/1.5 - 14.2[10,14] | 20 | ≥ 500 | EI 120-U/C | |
| 40 | 1.5 – 14.2[10] | 40 | ≥ 1000 | EI 120-U/C | |
| 40 – 88.9 | 1.5/2.0 – 14.2[10,15] | 40 | ≥ 1000 | EI 90-U/C | |
| The field of application given above for copper pipes is also valid for other metal pipes with lower heat conductivity than copper and a melting point of minimum 1100°C, e.g. unalloyed steel, low alloyed steel, cast iron, stainless steels, Ni alloys (NiCu, NiCr and NiMo alloys) and Ni. | | | | | |

### 2.6.4.2 Metal pipes with foamed elastomeric insulation according Table 4 and Hilti Firestop Bandage CFS-B,

Construction details (for symbols and abbreviations see Annex 4):

For specification of the foamed elastomeric insulation material to be used, see Table 4.

Two layers of Firestop Bandage CFS-B ($A_2$) wrapped around the pipe insulation, on each side of the seal. The bandage is positioned with half of its width (62.5 mm) within the seal (central marking line at the surface of the seal) and outside the seal fixed with wire.

No additional protection.

Continued insulation, sustained (CS)

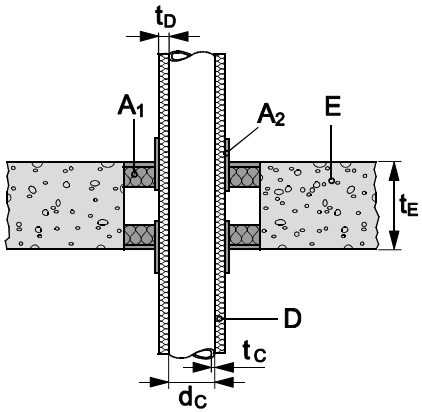


Local insulation, sustained (LS)

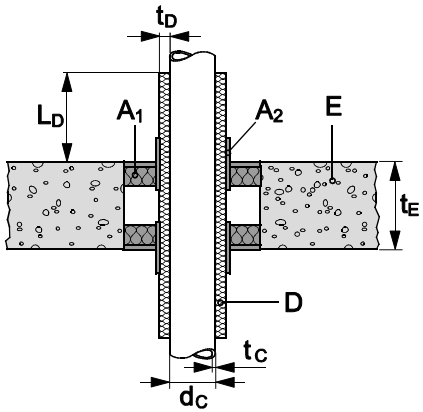


#### 2.6.4.2.1 Steel pipes with foamed elastomeric insulation according Table 4 and Hilti Firestop Bandage CFS-B

**Steel pipes (C) with continued insulation (D) – sustained – C/U**

| Pipe diameter ($d_C$) [mm] | Pipe wall thickness ($t_C$) [mm] | Insulation thickness ($t_D$) [mm] | Classification |
|---|---|---|---|
| 60.3 | 3.6 - 14.2[10] | 21.5 - 39 | EI 90-C/U |
| 60.3 - 114.3 | 3.6 - 14.2[10] | 21.5 - 39 | EI 90-C/U |

| **Steel pipes (C) with local insulation (D) – sustained – C/U** | | | | |
|---|---|---|---|---|
| Pipe | | Insulation | | Classification |
| diameter ($d_C$) [mm] | wall thickness ($t_C$) [mm] | thickness ($t_D$) [mm] | length ($L_D$) [mm] | |
| 60.3 | 3.6 - 14.2[10] | 21.5 - 39 | ≥ 500 | EI 90-C/U |
| 60.3 - 114.3 | 3.6 - 14.2[10] | 21.5 - 39 | ≥ 500 | EI 90-C/U |
| The field of application given above for steel pipes is also valid for other metal pipes with lower heat conductivity than unalloyed steel and a melting point of minimum 1050°C, e.g. low alloyed steel, cast iron, stainless steels, Ni alloys (NiCu, NrCr and NiMo alloys) | | | | |

**2.6.4.2.2 Stainless steel pipes with foamed elastomeric insulation according Table 4 and Hilti Firestop Bandage CFS-B**

| **Stainless steel pipes (C) with continued insulation (D) – sustained – C/U** | | | |
|---|---|---|---|
| Pipe diameter ($d_C$) [mm] | Pipe wall thickness ($t_C$) [mm] | Insulation thickness ($t_D$) [mm] | Classification |
| 60.3 | 2.0 - 14.2[10] | 21.5 - 39 | EI 90-C/U |
| 60.3 | 2.0 - 14.2[10] | 39 | EI 120-C/U |

| **Stainless steel pipes (C) with local insulation (D) – sustained – C/U** | | | | |
|---|---|---|---|---|
| Pipe | | Insulation | | Classification |
| diameter ($d_C$) [mm] | wall thickness ($t_C$) [mm] | thickness ($t_D$) [mm] | length ($L_D$) [mm] | |
| 60.3 | 2.0 - 14.2[10] | 21.5 - 39 | ≥ 500 | EI 90-C/U |
| 60.3 | 2.0 - 14.2[10] | 39 | ≥ 500 | EI 120-C/U |

**2.6.4.2.3 Copper pipes with foamed elastomeric insulation according Table 4 and Hilti Firestop Bandage CFS-B**

| **Copper pipes (C) with continued insulation (D) – sustained – C/U** | | | |
|---|---|---|---|
| Pipe diameter ($d_C$) [mm] | Pipe wall thickness ($t_C$) [mm] | Insulation thickness ($t_D$) [mm] | Classification |
| 28 | 1.0 - 14.2[10] | 19 - 35 | EI 60-C/U |
| 28 | 1.0 - 14.2[10] | 35 | EI 90-C/U |

| Copper pipes (C) with local insulation (D) – sustained – C/U | | | | |
|---|---|---|---|---|
| Pipe | | Insulation | | Classification |
| diameter ($d_C$) [mm] | wall thickness ($t_C$) [mm] | thickness ($t_D$) [mm] | length ($L_D$) [mm] | |
| 28 | 1.0 - 14.2[10] | 19 - 35 | ≥ 500 | EI 60-C/U |
| 28 | 1.0 - 14.2[10] | 35 | ≥ 500 | EI 90-C/U |
| The field of application given above for copper pipes is also valid for other metal pipes with lower heat conductivity than copper and a melting point of minimum 1100°C, e.g. unalloyed steel, low alloyed steel, cast iron, stainless steels, Ni alloys (NiCu, NiCr and NiMo alloys) and Ni. | | | | |

| 2.6.4.3 Metal pipes with foamed elastomeric insulation according Table 4 and Hilti Firestop Bandage CFS-B and additional protection | |
|---|---|
| Construction details<br>(for symbols and abbreviations see Annex 4):<br><br>For specification of the foamed elastomeric insulation material to be used see Table 4.<br><br>Two layers of Firestop Bandage CFS-B ($A_2$) wrapped around the pipe insulation on the bottom side of the seal. The bandage is positioned with half of its width (62.5 mm) within the seal (central marking line at the surface of the seal) and outside the seal fixed with wire.<br><br>Additional protection:<br>Over the bandage/pipe insulation an additional protection $AP_6$ according to 1.2 is installed:<br>$AP_6$: AF/Armaflex pipe insulation wrapped around the bandage/pipe insulation on each side of the seal, fixed with wire, length ($L_{AP}$) = 250 mm on each side, thickness ($t_{AP}$) = 32 mm. | **Continued insulation, sustained (CS)**<br> 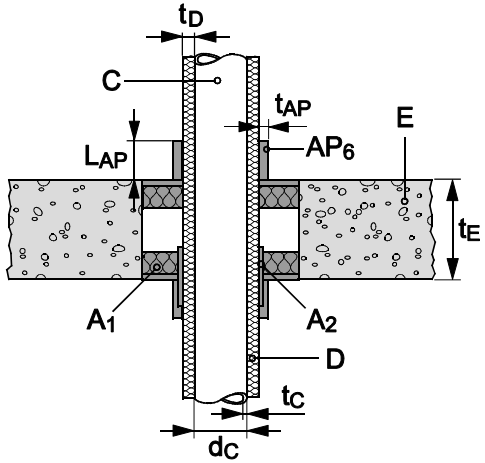 <br> |

| **Steel pipes (C) with continued insulation (D) – sustained – U/C** | | | |
|---|---|---|---|
| Pipe diameter ($d_C$) [mm] | Pipe wall thickness ($t_C$) [mm] | Insulation thickness ($t_D$) [mm] | Classification |
| 114.3 | 2.0 – 14.2 | 9 - 42 | EI 90-U/C |
| 159 | 2.6 – 14.2 | 10 | EI 90-U/C |
| **Copper pipes (C) with continued insulation (D) – sustained – U/C** | | | |
| Pipe diameter ($d_C$) [mm] | Pipe wall thickness ($t_C$) [mm] | Insulation thickness ($t_D$) [mm] | Classification |
| 10 | 1.0 – 14.2[10] | 7.5 – 40.5 | EI 120-U/C |
| 10 – 40 | 1.0/1.5 - 14.2[10,14] | 45.5 – 47.5 | EI 90-U/C |
| 40 – 88.9 | 1.5/2.0 - 14.2[10,15] | 7.5 – 9.0 | EI 120-U/C |

### 2.6.5 Plastic pipes with Hilti Firestop Collar CFS-C P

Construction details

(for symbols and abbreviations see Annex 4):

Hilti Firestop Collar CFS-C P ($A_3$) is installed on the bottom side of the seal, fixed by threaded rods, washers and nuts as specified in Annex 1.2.

In some cases an additional protection is required:

$AP_9$: Mineral wool board according to table 1 installed around the pipe in the air gap between the two layers of the Hilti Firestop Double Board Seal. Distance on all sides of the pipe 100 mm, depth 50 mm (height of the air gap).

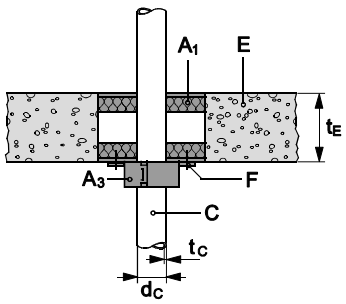


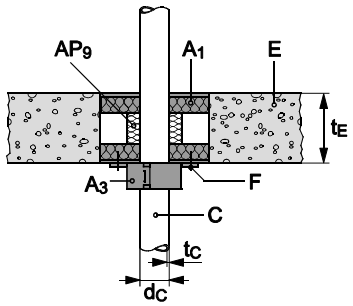

| 2.6.5.1 PVC-U pipes (C) according to EN ISO 1452-2, EN ISO 15493, DIN 8061/8062 with Hilti Firestop Collar CFS-C P | | | | |
|---|---|---|---|---|
| PVC-U pipes (C) according to EN ISO 1452-2, EN ISO 15493, DIN 8061/8062 – U/U, | | | | |
| Pipe diameter ($d_c$) [mm] | Pipe wall thickness $t_c$ [mm] | Collar size ($A_3$) | No. of hooks | Classification |
| | | | Additional protection | $AP_9$ |
| 20 | 1.5 – 2.2 | CFS-C P 50/1.5” | 2 | EI 120-U/U |
| 50 | 2.4 – 5.6 | CFS-C P 50/1.5” | 2 | EI 120-U/U |
| 63 | 3.0 – 4.7 | CFS-C P 63/2” | 3 | EI 120-U/U |
| 75 | 2.2 – 3.6 | CFS-C P 75/2.5” | 3 | EI 120-U/U |
| 90 | 2.7 – 4.3 | CFS-C P 90/3” | 4 | EI 120-U/U |
| 110 | 1.8 – 8.1 | CFS-C P 110/4” | 4 | EI 120-U/U |
| The results are also valid for PVC-U pipes according EN 1329-1[16] and EN 1453-[17] and PVC-C pipes according EN 1566-1. | | | | |
| PVC-U pipes (C) according to EN ISO 1452-2, EN ISO 15493, DIN 8061/8062 – U/C, | | | | |
| Pipe diameter ($d_c$) [mm] | Pipe wall thickness $t_c$ [mm] | Collar size ($A_3$) | No. of hooks | Classification |
| | | | Additional protection | - |
| 50 | 1.8 | CFS-C P 50/1.5" | 2 | EI 120-U/C |
| 160 | 1.8 – 11.9 | CFS-C P 160/6" | 6 | EI 120-U/C |
| The results are also valid for PVC-U pipes according EN 1329-1[16] and EN 1453-1[17] and PVC-C pipes according EN 1566-1. | | | | |
| PVC-U pipes (C) according to EN ISO 1452-2, EN ISO 15493, DIN 8061/8062 – C/U | | | | |
| Pipe diameter ($d_c$) [mm] | Pipe wall thickness $t_c$ [mm] | Collar size ($A_3$) | No. of hooks | Classification |
| | | | Additional protection | - |
| 125 | 3.7 – 6.0 | CFS-C P 125/5" | 4 | EI 120-C/U |
| 125 | 3.7 | CFS-C P 125/5" | 4 | EI 180-C/U |
| 160 | 2.5 – 11.8 | CFS-C P 160/6” | 6 | EI 120-C/U |

| 2.6.5.2 PE pipes (C) according to EN ISO 15494, DIN 8074/8075 with Hilti Firestop Collar CFS-C P | | | | |
|---|---|---|---|---|
| **PE pipes (C) according to EN ISO 15494, DIN 8074/8075 – U/U** | | | | |
| Pipe diameter ($d_c$) [mm] | Pipe wall thickness $t_c$ [mm] | Collar size ($A_3$) | No. of hooks | Classification |
| | | | Additional protection | $AP_9$ |
| 50 | 2.9 – 4.6 | CFS-C P 50/1.5” | 2 | EI 120-U/U |
| 63 | 1.8 – 5.8 | CFS-C P 63/2” | 3 | EI 120-U/U |
| 75 | 1.9 – 6.8 | CFS-C P 75/2.5” | 3 | EI 120-U/U |
| 90 | 2.2 – 8.2 | CFS-C P 90/3” | 4 | EI 120-U/U |
| 110 | 2.7 – 10.0 | CFS-C P 110/4” | 4 | EI 120-U/U |
| PE pipes (C) according to EN ISO 15494, DIN 8074/8075 – U/C | | | | |
| Pipe diameter ($d_c$) [mm] | Pipe wall thickness $t_c$ [mm] | Collar size ($A_3$) | No. of hooks | Classification |
| | | | Additional protection | - |
| 160 | 14.6 | CFS-C P 160/6" | 6 | EI 120-U/C |
| PE pipes (C) according to EN ISO 15494, DIN 8074/8075 – C/U | | | | |
| Pipe diameter ($d_c$) [mm] | Pipe wall thickness $t_c$ [mm] | Collar size ($A_3$) | No. of hooks | Classification |
| | | | Additional protection | $AP_9$ |
| 125 | 3.1 – 7.1 | CFS-C P 125/5” | 4 | EI 180-C/U |
| 160 | 14.6 | CFS-C P 160/6" | 6 | EI 180-C/U |

| 2.6.5.3 PE pipes (C) according to EN 1519[18] with Hilti Firestop Collar CFS-C P | | | | |
|---|---|---|---|---|
| PE pipes (C) according to EN 1519[18]– U/U | | | | |
| Pipe diameter ($d_c$) [mm] | Pipe wall thickness $t_c$ [mm] | Collar size ($A_3$) | No. of hooks | Classification |
| | | | Additional protection | $AP_9$ |
| 50 | 3.0 | CFS-C P 50/1.5” | 2 | EI 120-U/U |
| 63 | 3.0 | CFS-C P 63/2” | 3 | EI 120-U/U |
| 75 | 3.0 | CFS-C P 75/2.5” | 3 | EI 120-U/U |
| 90 | 3.5 | CFS-C P 90/3” | 4 | EI 120-U/U |
| 110 | 4.2 | CFS-C P 110/4” | 4 | EI 120-U/U |
| PE pipes (C) according to EN 1519[18] – C/U | | | | |
| Pipe diameter ($d_c$) [mm] | Pipe wall thickness $t_c$ [mm] | Collar size ($A_3$) | No. of hooks | Classification |
| | | | Additional protection | $AP_9$ |
| 125 | 4.8 | CFS-C P 125/5” | 4 | EI 180-C/U |
| 160 | 6.2 | CFS-C P 160/6” | 6 | EI 180-C/U |
| | | | | |

| **2.6.5.4 PE-S2 pipes "Geberit Silent-db20" with Hilti Firestop Collar CFS-C P**<br>Manufacturer: Geberit Int. | | | | |
|---|---|---|---|---|
| PE-S2 pipes "Geberit Silent-db20"– U/U | | | | |
| Pipe diameter ($d_c$) [mm] | Pipe wall thickness $t_c$ [mm] | Collar size ($A_3$) | No. of hooks | Classification |
| | | | Additional protection | $AP_9$ |
| 75 | 3.6 | CFS-C P 75/2.5" | 3 | EI 120-U/U |
| 90 | 5.5 | CFS-C P 90/3" | 4 | EI 120-U/U |
| PE-S2 pipes "Geberit Silent-db20"– C/U | | | | |
| Pipe diameter ($d_c$) [mm] | Pipe wall thickness $t_c$ [mm] | Collar size ($A_3$) | No. of hooks | Classification |
| | | | Additional protection | $AP_9$ |
| 110 | 6.0 | CFS-C P 110/4" | 4 | EI 120-C/U |
| 135 | 6.0 | CFS-C P 160/6" | 6 | EI 180-C/U |
| 160 | 7.0 | CFS-C P 160/6" | 6 | EI 180-C/U |

**2.6.5.5 PE-HD 100 RC pipes "Wavin TS"– U/C with Hilti Firestop Collar CFS-C P**

Manufacturer: Wavin Ireland Ltd.

| Pipe diameter ($d_c$) [mm] | Pipe wall thickness $t_c$ [mm] | Collar size ($A_3$) | No. of hooks | Classification |
|---|---|---|---|---|
| | | | Additional protection | $AP_9$ |
| 50 | 4.6 | CFS-C P 50/1.5" | 2 | EI 90-U/C |
| 63 | 5.8 | CFS-C P 63/2" | 2 | EI 120-U/C |
| 75 | 6.8 | CFS-C P 75/2.5" | 3 | EI 120-U/C |
| 90 | 8.2 | CFS-C P 90/3" | 3 | EI 120-U/C |
| 110 | 10 | CFS-C P 110/4" | 4 | EI 120-U/C |

**2.6.5.6 Non-regulated PP pipes with Hilti Firestop Collar CFS-C P**

**2.6.5.6.1 PP pipes , non regulated**

For pipe type and manufacturer refer to 2.1.6.

| Pipe diameter ($d_c$) [mm] | Pipe wall thickness $t_c$ [mm] | Collar size ($A_3$) | No. of hooks | Classification |
|---|---|---|---|---|
| | | | Additional protection | $AP_9$ |
| 50 | 1.8 -2.0 | CFS-C P 50/1.5" | 2 | EI 90-U/U |
| 58 | 4.0 | CFS-C P 63/2" | 2 | EI 90-U/U |
| 70 | 4.5 | CFS-C P 75/2.5" | 3 | EI 90-U/U |
| 75 | 1.9 – 3.8 | CFS-C P 75/2.5" | 3 | EI 90-U/U |
| 78 | 4.5 | CFS-C P 75/2.5" | 3 | EI 90-U/U |
| 90 | 2.8 - 4.5 | CFS-C P 90/3" | 3 | EI 90-U/U |
| 110 | 2.7 – 5.3 | CFS-C P 110/4" | 4 | EI 90-U/U |

| | | | | |
|---|---|---|---|---|
| **2.6.5.6.2 PP pipes "Raupiano Plus"– U/U**<br>Manufacturer: Rehau AG, | | | | |
| Pipe diameter ($d_c$) [mm] | Pipe wall thickness $t_c$ [mm] | Collar size ($A_3$) | No. of hooks | Classification |
| | | | Additional protection | $AP_9$ |
| 50 | 1.8 | CFS-C P 50/1.5" | 2 | EI 120-U/U |
| 75 | 1.9 | CFS-C P 75/2.5" | 3 | EI 120-U/U |
| 110 | 2.7 | CFS-C P 110/4" | 4 | EI 120-U/U |
| **2.6.5.6.3 PP pipes „Skolan-dB"– U/U**<br>Manufacturer: Magnaplast GmbH, | | | | |
| Pipe diameter ($d_c$) [mm] | Pipe wall thickness $t_c$ [mm] | Collar size ($A_3$) | No. of hooks | Classification |
| | | | Additional protection | $AP_9$ |
| 58 | 4.0 | CFS-C P 63/2" | 2 | EI 120-U/U |
| 78 | 4.5 | CFS-C P 75/2.5" | 3 | EI 120-U/U |
| 90 | 4.5 | CFS-C P 90/3" | 3 | EI 120-U/U |
| 110 | 5.3 | CFS-C P 110/4" | 4 | EI 120-U/U |
| **2.6.5.6.4 PP pipes "Wavin AS" or "Phonex AS"– U/U**<br>Manufacturer: Wavin Ireland Ltd or KeKelit | | | | |
| Pipe diameter ($d_c$) [mm] | Pipe wall thickness $t_c$ [mm] | Collar size ($A_3$) | No. of hooks | Classification |
| | | | Additional protection | $AP_9$ |
| 70 | 4.5 | CFS-C P 75/2.5" | 3 | EI 120-U/U |
| 90 | 4.5 | CFS-C P 90/3" | 3 | EI 120-U/U |
| **2.6.5.6.5 PP pipes "Wavin SiTech"– U/U**<br>Manufacturer: Wavin Ireland Ltd. | | | | |
| Pipe diameter ($d_c$) [mm] | Pipe wall thickness $t_c$ [mm] | Collar size ($A_3$) | No. of hooks | Classification |
| | | | Additional protection | $AP_9$ |

| | | | | |
|---|---|---|---|---|
| 75 | 2.3 | CFS-C P 75/2.5” | 3 | EI 120-U/U |
| 90 | 2.8 | CFS-C P 90/3” | 3 | EI 120-U/U |

**2.6.5.6.6 Non-regulated PP pipes – C/U**

For pipe type and manufacturer refer to 2.1.6.

| Pipe diameter ($d_c$) [mm] | Pipe wall thickness $t_c$ [mm] | Collar size ($A_3$) | No. of hooks | Classification |
|---|---|---|---|---|
| | | | Additional protection | $AP_9$ |
| 110 | 5.3 | CFS-C P 110/4” | 4 | EI 120-C/U |
| 125 | 3.1 – 5.3 | CFS-C P 125/5” | 4 | EI 180-C/U |
| 135 | 5.3 – 5.8 | CFS-C P 160/6” | 6 | EI 180-C/U |
| 160 | 3.9 – 7.5 | CFS-C P 160/6” | 6 | EI 180-C/U |

| 2.6.5.7 PP pipes according to EN ISO 15874 and/or DIN 8077/8078 with Hilti Firestop Collar CFS-C P | | | | |
|---|---|---|---|---|
| **2.6.5.7.1 PP-H pipes "PROGEF standard pipe" according DIN 8077/8078 – U/U**<br>Manufacturer: Georg Fischer | | | | |
| Pipe diameter ($d_c$) [mm] | Pipe wall thickness $t_c$ [mm] | Collar size ($A_3$) | No. of hooks | Classification |
| | | | Additional protection | $AP_9$ |
| 20 | 1.9 | CFS-C P 50/1.5" | 2 | EI 120-U/U |
| 50 | 2.9 | CFS-C P 50/1.5" | 2 | EI 120-U/U |
| 63 | 5.8 | CFS-C P 63/2" | 3 | EI 120-U/U |
| 75 | 6.8 | CFS-C P 75/2.5" | 3 | EI 120-U/U |
| 90 | 8.2 | CFS-C P 90/3" | 3 | EI 120-U/U |
| **2.6.5.7.2 PP-H 100 pipes "Dekaprop Industry pipes" according DIN 8077/8078 – U/U**<br>Manufacturer: Georg Fischer | | | | |
| Pipe diameter ($d_c$) [mm] | Pipe wall thickness $t_c$ [mm] | Collar size ($A_3$) | No. of hooks | Classification |
| | | | Additional protection | $AP_9$ |
| 50 | 1.8 | CFS-C P 50/1.5" | 2 | EI 120-U/U |
| 63 | 1.8 | CFS-C P 63/2" | 3 | EI 120-U/U |
| 75 | 1.9 | CFS-C P 75/2.5" | 3 | EI 120-U/U |
| 90 | 2.2 | CFS-C P 90/3" | 3 | EI 120-U/U |
| 110 | 2.7 | CFS-C P 110/4" | 4 | EI 120-U/U |
| **2.6.5.7.3 PP-R pipes "Fusiotherm" according EN ISO 15874 – U/U**<br>Manufacturer: Aquatherm | | | | |
| Pipe diameter ($d_c$) [mm] | Pipe wall thickness $t_c$ [mm] | Collar size ($A_3$) | No. of hooks | Classification |
| | | | Additional protection | $AP_9$ |
| 20 | 3.4 | CFS-C P 50/1.5" | 2 | EI 120-U/U |

**2.6.5.8 PP pipes according to EN ISO 15874 and/or DIN 8077/8078 with Hilti Firestop Collar CFS-C P**

**2.6.5.8.1 PP-H pipes "PROGEF standard pipe" according DIN 8077/8078 – U/C**

Manufacturer: Georg Fischer

| Pipe diameter ($d_c$) [mm] | Pipe wall thickness $t_c$ [mm] | Collar size ($A_3$) | No. of hooks | Classification |
|---|---|---|---|---|
| | | | Additional protection | $AP_9$ |
| 50 | 4.6 | CFS-C P 50/1.5" | 2 | EI 120-U/C |
| 63 | 5.8 | CFS-C P 63/2" | 3 | EI 120-U/C |
| 75 | 6.8 | CFS-C P 75/2.5" | 3 | EI 120-U/C |
| 90 | 8.2 | CFS-C P 90/3" | 3 | EI 120-U/C |

**2.6.5.8.2 PP-R pipes "Fusiotherm" according EN ISO 15874 – U/C**

Manufacturer: Aquatherm

| Pipe diameter ($d_c$) [mm] | Pipe wall thickness $t_c$ [mm] | Collar size ($A_3$) | No. of hooks | Classification |
|---|---|---|---|---|
| | | | Additional protection | $AP_9$ |
| 40 | 3.7 – 5.5 | CFS-C P 50/1.5" | 2 | EI 120-U/C |
| 50 | 4.6 – 6.9 | CFS-C P 50/1.5" | 2 | EI 120-U/C |
| 63 | 10.5 | CFS-C P 63/2" | 3 | EI 120-U/C |
| 75 | 6.8 – 12.5 | CFS-C P 75/2.5" | 3 | EI 120-U/C |
| 90 | 15.0 | CFS-C P 90/3" | 3 | EI 120-U/C |
| 110 | 10.0 – 15.1 | CFS-C P 110/4" | 4 | EI 120-U/C |

**2.6.5.8.3 PP-R FS pipes "Firestop" according EN ISO 15874 and DIN 8077/8078– U/C**

Manufacturer: Aquatherm

| Pipe diameter ($d_c$) [mm] | Pipe wall thickness $t_c$ [mm] | Collar size ($A_3$) | No. of hooks | Classification |
|---|---|---|---|---|
| | | | Additional protection | $AP_9$ |
| 90 | 12.3 | CFS-C P 90/3" | 3 | EI 120-U/C |

**2.6.5.9 ABS/PUR/PE-HD pipes "Coolfit"– U/C with Hilti Firestop Collar CFS-C P**

Manufacturer: +GF+ Georg Fischer Piping Systems.

| Pipe diameter ($d_c$) [mm] | inner pipe diameter [mm] | Collar size ($A_3$) | No. of hooks | Classification |
|---|---|---|---|---|
| | | | Additional protection | $AP_9$ |
| 90 | 32 | CFS-C P 90/3” | 3 | EI 90-U/C |
| 110 | 40 – 50 | CFS-C P 110/4” | 4 | EI 120-U/C |

**2.6.5.10 Special pipes with Hilti Firestop Collar CFS-C P**

**2 small plastic pipes in 1 Hilti Firestop Collar CFS-C P – U/U**

Construction details
(for symbols and abbreviations see Annex 4):

Hilti Firestop Collar CFS-C P ($A_3$) is installed on the bottom side of the seal,
Fixed by threaded rods, washers and nuts as specified in Annex 1.2.

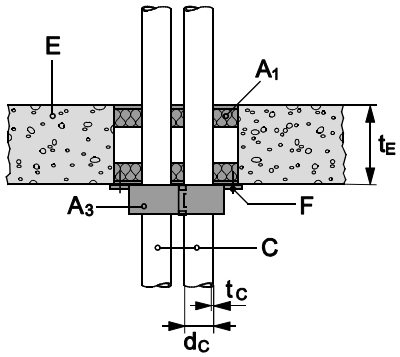


| Pipe diameter ($d_c$) [mm] | Pipe wall thickness $t_c$ [mm] | Pipe material | Pipe standard | Collar size ($A_3$) | No. of hooks | Classification |
|---|---|---|---|---|---|---|
| 20 | 1.9 / 2.8 | PE | EN ISO 15494, DIN 8074/8075 | CFS-C P 50/1.5” | 2 | EI 90-U/U |
| 20 | 1.5 / 2.2 | PVC-U | EN ISO 15493, DIN 8061/8062 | CFS-C P 50/1.5” | 2 | EI 90-U/U |
| 20 | 3.4 | PP-R | EN ISO 15874, DIN 8077/8078 | CFS-C P 50/1.5” | 2 | EI 90-U/U |
| 20 | 1.9 | PP-H | EN ISO 15874, DIN 8077/8078 | CFS-C P 50/1.5” | 2 | EI 90-U/U |

**Pipe/hose for wood pellet transport with Hilti Firestop Collar CFS-C P – U/C**

Construction details
(for symbols and abbreviations see Annex 4):

Hilti Firestop Collar CFS-C P ($A_3$) is installed on the bottom side of the seal, fixed by threaded rods, washers and nuts as specified in Annex 1.2.

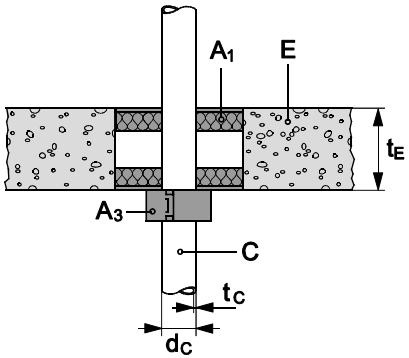


| Pipe diameter ($d_c$) [mm] | Pipe wall thickness $t_c$ [mm] | Pipe material / standard | Collar size ($A_3$) | No. of hooks | Classification |
|---|---|---|---|---|---|
| 59 | 4.0 | Pipe/hose for wood pellet transport, e.g. Pelletschlauch PVC NW51 of Erich Kuhn GmbH, Noviatox NW51 of Heizmann AG, PVC Saug- und Druckschlauch für Holzpellets of Haberkorn GmbH, RAUSPIRAFLEX pellet therm of Rehau AG, Pellet-Absaugschlauch PVC Sciroppo AS of CASTAN GmbH | CFS-C P 63/2” | 3 | EI 90-U/C |

| 2.6.6 **Plastic pipes with foamed elastomeric insulation according to Table 4 and Hilti Firestop Collar CFS-C P** |
|---|
| Construction details<br>(for symbols and abbreviations see Annex 4):<br>For specification of the foamed elastomeric insulation material to be used see table 4.<br>Hilti Firestop Collar CFS-C P ($A_3$) is installed on the bottom side of the seal, fixed by threaded rods, washers and nuts as specified in Annex 1.2.<br><br>In some cases an additional protection is required:<br>$AP_9$: Mineral wool board according to table 1 installed around the pipe in the air gap between the two layers of the Hilti Firestop Double Board Seal. Distance on all sides of the pipe 100 mm, depth 50 mm (height of the air gap). |

| Continued insulation, sustained (CS) | Local insulation, sustained (LS) |
|---|---|
| 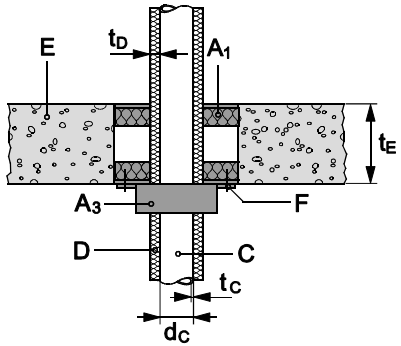  | 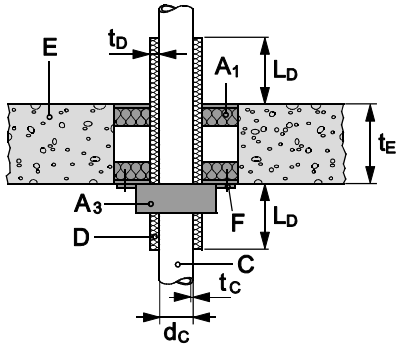  |
| Continued insulation, sustained (CS) with additional protection $AP_9$ | Local insulation, sustained (LS) with additional protection $AP_9$ |
| 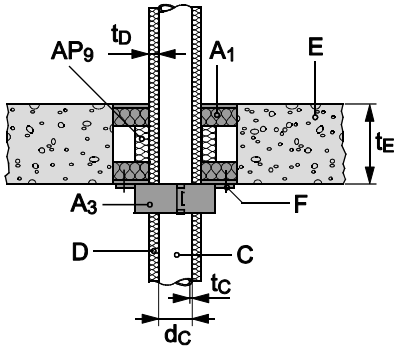  | 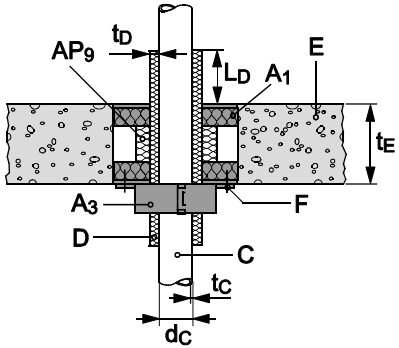  |

**2.6.6.1 Pipes (C) with continued insulation (D) – sustained – U/C**

**2.6.6.1.1 PP pipes "Fusiotherm SDR 11"**

Manufacturer: Aquatherm

| Pipe | | Insulation | Collar size ($A_3$) | No. of hooks | Classification | |
|---|---|---|---|---|---|---|
| diameter ($d_c$) [mm] | wall thickness ($t_c$) [mm] | thickness ($t_D$) [mm] | | | | |
| | | | | Additional protection | - | $AP_9$ |
| 40 | 3.7 | 9 | CFS-C P 63/2" | 2 | - | EI 120-U/C |

| | | | | | | |
|---|---|---|---|---|---|---|
| 50 | 4.6 | 9 | CFS-C P 75/2.5” | 3 | - | EI 120-U/C |
| 75 | 6.8 | 10 | CFS-C P 90/3” | 3 | - | EI 120-U/C |
| 110 | 10.0 | 10 | CFS-C P 125/5” | 4 | EI 90-U/C | EI 120-U/C |

**2.6.6.1.2 PP pipes “Fusiotherm Faser SDR 7.4/S3.2”**

Manufacturer: Aquatherm

| Pipe | | Insulation | Collar size ($A_3$) | No. of hooks | Classification | |
|---|---|---|---|---|---|---|
| diameter ($d_c$) [mm] | wall thickness ($t_c$) [mm] | thickness ($t_D$) [mm] | | | | |
| | | | Additional protection | | - | $AP_9$ |
| 40 | 5.5 | 9 | CFS-C P 63/2” | 2 | - | EI 120-U/C |
| 50 | 6.9 | 9 | CFS-C P 63/2” | 2 | EI 90-U/C | - |
| 50 | 6.9 | 9 | CFS-C P 75/2.5” | 3 | - | EI 120-U/C |
| 75 | 10.3 | 10 | CFS-C P 90/3” | 3 | - | EI 120-U/C |
| 110 | 15.1 | 10 | CFS-C P 125/5” | 4 | - | EI 120-U/C |

**2.6.6.1.3 PE-100RC pipes “ Wavin TS”**

Manufacturer: Wavin

| Pipe | | Insulation | Collar size ($A_3$) | No. of hooks | Classification | |
|---|---|---|---|---|---|---|
| diameter ($d_c$) [mm] | wall thickness ($t_c$) [mm] | thickness ($t_D$) [mm] | | | | |
| | | | Additional protection | | - | $AP_9$ |
| 50 | 4.6 | 9 | CFS-C P 63/2” | 2 | - | EI 120-U/C |
| 50 | 4.6 | 9 | CFS-C P 75/2.5” | 3 | - | EI 120-U/C |
| 63 | 5.8 | 10 | CFS-C P 75/2.5” | 3 | - | EI 120-U/C |
| 75 | 6.8 | 10 | CFS-C P 90/3” | 3 | - | EI 120-U/C |
| 90 | 8.2 | 10 | CFS-C P 110/4” | 4 | EI 90-U/C | EI 120-U/C |
| 110 | 10.0 | 10 | CFS-C P 125/5” | 4 | - | EI 120-U/C |

**2.6.6.1.4 PE-Xa pipes “Rautitan flex”**

Manufacturer: Rehau

| Pipe | Insulation | Collar size ($A_3$) | | Classification |
|---|---|---|---|---|

| diameter ($d_c$) [mm] | wall thickness ($t_c$) [mm] | thickness ($t_D$) [mm] | | No. of hooks | |
|---|---|---|---|---|---|
| | | | | Additional protection | $AP_9$ |
| 16 | 2.2 | 8 | CFS-C P 50/1.5” | 2 | EI 120-U/C |
| 16 | 2.2 | 32 | CFS-C P 90/3” | 3 | EI 120-U/C |
| 32 | 4.4 | 9 | CFS-C P 50/1.5” | 2 | EI 120-U/C |
| 32 | 4.4 | 35 | CFS-C P 110/4” | 4 | EI 120-U/C |
| 40 | 5.5 | 9 | CFS-C P 63/2” | 2 | EI 120-U/C |
| 40 | 5.5 | 20.5 | CFS-C P 75/2.5” | 3 | EI 120-U/C |
| 50 | 6.9 | 9 | CFS-C P 75/2.5” | 2 | EI 120-U/C |
| 50 | 6.9 | 21 | CFS-C P 90/3” | 3 | EI 120-U/C |
| 63 | 8.6 | 9 | CFS-C P 90/3” | 3 | EI 120-U/C |
| 63 | 8.6 | 21.5 | CFS-C P 110/4” | 4 | EI 120-U/C |

| **2.6.6.1.5 PP pipes "Climatherm Faserverbundrohr"**<br>Manufacturer: Aquatherm | | | | | |
|---|---|---|---|---|---|
| Pipe | | Insulation | Collar size ($A_3$) | No. of hooks | Classification |
| diameter ($d_c$) [mm] | wall thickness ($t_c$) [mm] | thickness ($t_D$) [mm] | | | |
| | | | | Additional protection | $AP_9$ |
| 75 | 6.8 | 10 | CFS-C P 90/3" | 3 | EI 120-U/C |

| **2.6.6.1.6 PP pipes "Firestop"**<br>Manufacturer: Aquatherm | | | | | |
|---|---|---|---|---|---|
| Pipe | | Insulation | Collar size ($A_3$) | No. of hooks | Classification |
| diameter ($d_c$) [mm] | wall thickness ($t_c$) [mm] | thickness ($t_D$) [mm] | | | |
| | | | | Additional protection | $AP_9$ |
| 90 | 12.3 | 22.5 | CFS-C P 160/6" | 4 | EI 120-U/C |
| 110 | 15.1 | 10 | CFS-C P 125/5" | 4 | EI 120-U/C |

| **2.6.6.1.7 PVC-C pipes "Friatherm starr"**<br>Manufacturer: Friatec | | | | | |
|---|---|---|---|---|---|
| Pipe | | Insulation | Collar size ($A_3$) | No. of hooks | Classification |
| diameter ($d_c$) [mm] | wall thickness ($t_c$) [mm] | thickness ($t_D$) [mm] | | | |
| | | | | Additional protection | $AP_9$ |
| 32 | 3.6 | 9 | CFS-C P 50/1.5" | 2 | EI 120-U/C |
| 40 | 4.5 | 9 | CFS-C P 50/1.5" | 2 | EI 120-U/C |
| 50 | 5.6 | 9 | CFS-C P 75/2.5" | 3 | EI 120-U/C |
| 63 | 7.1 | 9 | CFS-C P 110/4" | 4 | EI 120-U/C |

**2.6.6.2 Pipes (C) with local insulation (D) – sustained – U/C**

**2.6.6.2.1 PP pipes "Fusiotherm SDR 11"**

Manufacturer: Aquatherm

| Pipe | | Insulation | | Collar size ($A_3$) | No. of hooks | Classification | |
|---|---|---|---|---|---|---|---|
| diameter ($d_c$) [mm] | wall thickness ($t_c$) [mm] | thickness ($t_D$) [mm] | length ($L_D$) [mm] | | | | |
| | | | | | Additional protection | - | $AP_9$ |
| 40 | 3.7 | 9 | ≥200 | CFS-C P 63/2" | 2 | - | EI 120-U/C |
| 50 | 4.6 | 9 | ≥200 | CFS-C P 75/2.5" | 3 | - | EI 120-U/C |
| 75 | 6.8 | 10 | ≥200 | CFS-C P 90/3" | 3 | - | EI 120-U/C |
| 110 | 10.0 | 10 | ≥250 | CFS-C P 125/5" | 4 | EI 90-U/C | - |
| 110 | 10.0 | 10 | ≥200 | CFS-C P 125/5" | 4 | - | EI 120-U/C |

**2.6.6.2.2 PP pipes "Fusiotherm Faser SDR 7.4/S3.2"**

Manufacturer: Aquatherm

| Pipe | | Insulation | | Collar size ($A_3$) | No. of hooks | Classification | |
|---|---|---|---|---|---|---|---|
| diameter ($d_c$) [mm] | wall thickness ($t_c$) [mm] | thickness ($t_D$) [mm] | length ($L_D$) [mm] | | | | |
| | | | | | Additional protection | - | $AP_9$ |
| 40 | 5.5 | 9 | ≥200 | CFS-C P 63/2" | 2 | - | EI 120-U/C |
| 50 | 6.9 | 9 | ≥250 | CFS-C P 63/2" | 2 | EI 90-U/C | - |
| 50 | 6.9 | 9 | ≥200 | CFS-C P 75/2.5" | 3 | - | EI 120-U/C |
| 75 | 10.3 | 10 | ≥200 | CFS-C P 90/3" | 3 | - | EI 120-U/C |
| 110 | 15.1 | 10 | ≥200 | CFS-C P 125/5" | 4 | - | EI 120-U/C |

**2.6.6.2.3 PE-100RC pipes "Wavin TS"**

Manufacturer: Wavin

| Pipe | | Insulation | | Collar size ($A_3$) | No. of hooks | Classification | |
|---|---|---|---|---|---|---|---|
| diameter ($d_c$) [mm] | wall thickness ($t_c$) [mm] | thickness ($t_D$) [mm] | length ($L_D$) [mm] | | | | |
| | | | | | Additional protection | - | $AP_9$ |
| 50 | 4.6 | 9 | ≥200 | CFS-C P 63/2" | 2 | - | EI 120-U/C |
| 50 | 4.6 | 9 | ≥200 | CFS-C P 75/2.5" | 3 | - | EI 120-U/C |
| 63 | 5.8 | 10 | ≥200 | CFS-C P 75/2.5" | 3 | - | EI 120-U/C |
| 75 | 6.8 | 10 | ≥200 | CFS-C P 90/3" | 3 | - | EI 120-U/C |
| 90 | 8.2 | 10 | ≥250 | CFS-C P 110/4" | 4 | EI 90-U/C | - |
| 90 | 8.2 | 10 | ≥200 | CFS-C P 110/4" | 4 | - | EI 120-U/C |
| 110 | 10.0 | 10 | ≥200 | CFS-C P 125/5" | 4 | - | EI 120-U/C |

**2.6.6.2.4 PE-Xa pipes "Rautitan flex"**

Manufacturer: Rehau

| Pipe | | Insulation | | Collar size ($A_3$) | No. of hooks | Classification |
|---|---|---|---|---|---|---|
| diameter ($d_c$) [mm] | wall thickness ($t_c$) [mm] | thickness ($t_D$) [mm] | length ($L_D$) [mm] | | | |
| | | | | | Additional protection | $AP_9$ |
| 40 | 5.5 | 9 | ≥200 | CFS-C P 63/2" | 2 | EI 120-U/C |
| 40 | 5.5 | 20.5 | ≥250 | CFS-C P 75/2.5" | 3 | EI 120-U/C |
| 50 | 6.9 | 9 | ≥200 | CFS-C P 75/2.5" | 3 | EI 120-U/C |
| 50 | 6.9 | 21 | ≥250 | CFS-C P 90/3" | 3 | EI 120-U/C |
| 63 | 8.6 | 9 | ≥200 | CFS-C P 90/3" | 3 | EI 120-U/C |
| 63 | 8.6 | 21.5 | ≥250 | CFS-C P 110/4" | 4 | EI 120-U/C |

**2.6.6.2.5 PP pipes "Climatherm Faserverbundrohr"**

Manufacturer: Aquatherm

| Pipe | | Insulation | | Collar size ($A_3$) | No. of hooks | Classification |
|---|---|---|---|---|---|---|
| diameter ($d_c$) [mm] | wall thickness ($t_c$) [mm] | thickness ($t_D$) [mm] | length ($L_D$) [mm] | | | |
| | | | | | Additional protection | $AP_9$ |
| 75 | 6.8 | 10 | ≥200 | CFS-C P 90/3" | 3 | EI 120-U/C |

**2.6.6.2.6 PP pipes "Firestop"**

Manufacturer: Aquatherm

| Pipe | | Insulation | | Collar size ($A_3$) | No. of hooks | Classification |
|---|---|---|---|---|---|---|
| diameter ($d_c$) [mm] | wall thickness ($t_c$) [mm] | thickness ($t_D$) [mm] | length ($L_D$) [mm] | | | |
| | | | | | Additional protection | $AP_9$ |
| 90 | 12.3 | 22.5 | ≥250 | CFS-C P 160/6" | 4 | EI 120-U/C |
| 110 | 15.1 | 10 | ≥200 | CFS-C P 125/5" | 4 | EI 120-U/C |

**2.6.6.2.7 PVC-C pipes "Friatherm starr"**

Manufacturer: Friatec

| Pipe | | Insulation | | Collar size ($A_3$) | No. of hooks | Classification |
|---|---|---|---|---|---|---|
| diameter ($d_c$) [mm] | wall thickness ($t_c$) [mm] | thickness ($t_D$) [mm] | length ($L_D$) [mm] | | | |
| | | | | | Additional protection | $AP_9$ |
| 32 | 3.6 | 9 | ≥200 | CFS-C P 50/1.5" | 2 | EI 120-U/C |
| 40 | 4.5 | 9 | ≥200 | CFS-C P 50/1.5" | 2 | EI 120-U/C |
| 50 | 5.6 | 9 | ≥200 | CFS-C P 75/2.5" | 3 | EI 120-U/C |
| 63 | 7.1 | 9 | ≥200 | CFS-C P 110/4" | 4 | EI 120-U/C |

## 2.6.7 Plastic pipes with Hilti Firestop Collar CFS-C

Construction details
(for symbols and abbreviations see Annex 4):

Hilti Firestop Collar CFS-C ($A_3$) is installed on the bottom side of the seal, fixed by threaded rods, washers and nuts as specified in Annex 1.2.

No additional protection.

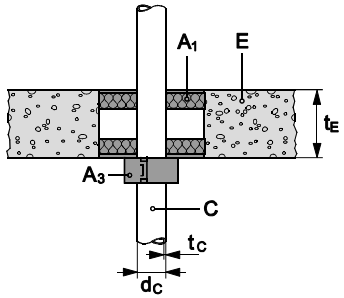


### 2.6.7.1 PVC-U pipes (C) according to EN ISO 1452-2, EN ISO 15493, DIN 8061/8062 – U/C

| Pipe diameter ($d_c$) [mm] | Pipe wall thickness ($t_{c1}$) [mm] | Collar size ($A_3$) | No. of hooks | Classification |
|---|---|---|---|---|
| 32 | 1.9 | CFS-C 50/1.5" | 2 | EI 120-U/C |
| 110 | 2.2 – 8.2 | CFS-C 110/4" | 4 | EI 120-U/C |
| 160 | 4.7 | CFS-C 160/6” | 5 | EI 90-U/C |

The results are also valid for PVC-U pipes according EN 1329-1[16] and EN 1453-1[17] and PVC-C pipes according EN 1566-1

### 2.6.7.2 PE pipes (C) according to EN ISO 15494, DIN 8074/8075

| Pipe diameter ($d_c$) [mm] | Pipe wall thickness $t_c$ [mm] | Collar size ($A_3$) | No. of hooks | Classification |
|---|---|---|---|---|
| 50 | 3.0 | CFS-C 50/1.5” | 2 | EI 90-U/C |
| 63 | 2.0 | CFS-C 63/2” | 2 | EI 90-U/C |

### 2.6.7.3 PE-100 pipes, EN 12666 , Geberit Silent dB20

| Pipe diameter ($d_c$) [mm] | Pipe wall thickness $t_c$ [mm] | Collar size ($A_3$) | No. of hooks | Classification |
|---|---|---|---|---|
| 110 | 4,2 | CFS-C 110/4” | 4 | EI 120-U/C |
| 160 | 6,2 | CFS-C 160/6” | 4 | EI 120-U/C |

| 2.6.7.4 PP-R pipes , „Aquatherm Green", acc. EN 15874 and DIN 8077/78, with additional protection AP9 see 2.6.5 and 2.6.6, offset = 80mm | | | | |
|---|---|---|---|---|
| Pipe diameter ($d_c$) [mm] | Pipe wall thickness $t_c$ [mm] | Collar size ($A_3$) | No. of hooks | Classification |
| 110 | 10 | CFS-C 110/4" | 4 | EI 120-U/C |

| 2.6.7.5 PP-R pipes , „Aquatherm Blue", acc. EN 15874 and DIN 8077/78, with additional protection AP9 see 2.6.5 and 2.6.6, offset = 80mm | | | | |
|---|---|---|---|---|
| Pipe diameter ($d_c$) [mm] | Pipe wall thickness $t_c$ [mm] | Collar size ($A_3$) | No. of hooks | Classification |
| 160 | 14,6 | CFS-C 160/6" | 4 | EI 120-U/C |

| 2.6.7.6 PVC-U pipes , Georg Fischer "Dekadur" acc. DIN 8061/62, with additional protection AP9 see 2.6.5 and 2.6.6, offset = 80mm | | | | |
|---|---|---|---|---|
| Pipe diameter ($d_c$) [mm] | Pipe wall thickness $t_c$ [mm] | Collar size ($A_3$) | No. of hooks | Classification |
| 160 | 4,7 | CFS-C 160/6" | 4 | EI 120-U/C |

## 2.6.8 Plastic pipes, sealed with Hilti Firestop Collar Endless CFS-C EL

Construction details (for symbols and abbreviations see Annex 4):

Hilti Firestop Collar Endless CFS-C EL has to be installed on the underside (soffit) of the floor only.

Floor type:

- Rigid, fire rated floor acc.2.1e), minimum thickness 150mm

Hilti Firestop Collar Endless CFS-C EL should be fixed in mineral wool boards using threaded rods minimum M6 with flat washer and nut, penetrating the boards.

Pipes have to be grouped in lines only; number of pipes in line is not limited.

Minimum distances

- between pipes in single penetration: ≥ 200mm
- between pipes in one line: ($s_1$ ≥ 100 mm)
- between two lines of pipes: ≥ 200mm
- between pipe and building element ($s_3$ ≥ 0 mm)

Gap sealing (board to building element and board to penetrating pipe should be done with CFS-S ACR. Coated Boards have to be installed flush with floor surface on both sides. The free space between both boards has to be closed around penetrating plastic pipes with mineral wool, at least 100mm around the plastic pipes. Pipes could be covered with a sound decoupling insulation, penetrating the floor and all installed jackets CFS-C EL in LS and CS situation. Sound decoupling insulation comprise a max.9mm polyethylene based insulation or a max. 4mm Polyesther insulation (*Thermaflex, ThermoVließ B2)*

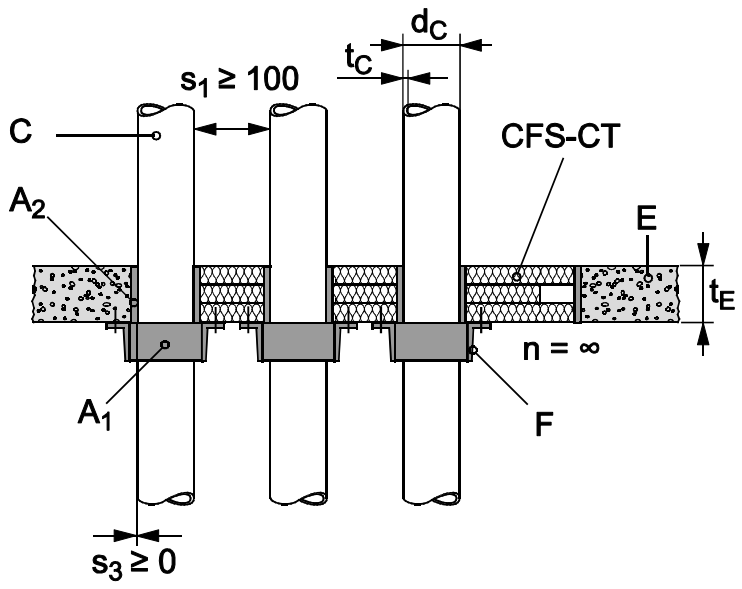

### 2.6.8.1 PE pipes acc. EN 1519-1, EN12201-2 and EN 12666-1 and ABS-pipes acc. EN 1455-1 and SAN+PVC-pipes acc. EN 1565-1

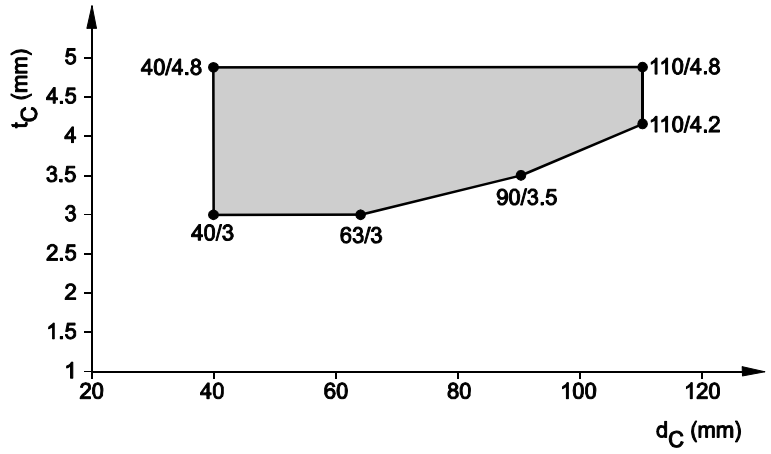


Approved pipe range for EI90-U/U,

penetrating Hilti Firestop Boards CFS-CT B 1S in rigid floor, ($t_E$ > 100mm), according to 2.1.e), sealed with Hilti Firestop Collar CFS-C EL

### 2.6.8.2 ABS pipes acc. EN 1455-1, EN 15493 and SAN+PVC-pipes acc. EN 1565-1

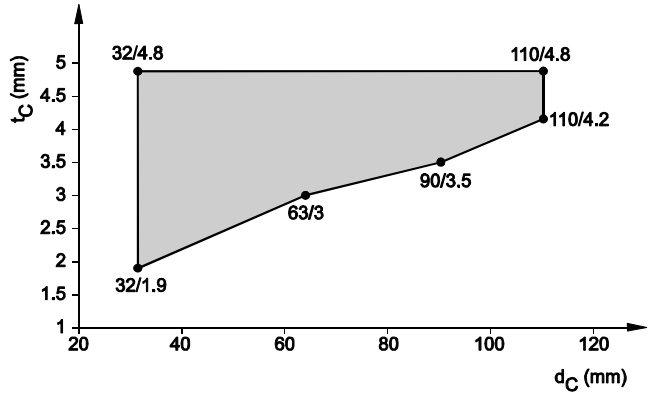


Approved pipe range for EI90-U/U,

penetrating Hilti Firestop Boards CFS-CT B 1S in rigid floor, ($t_E$ > 100mm), according to 2.1.e), sealed with Hilti Firestop Collar CFS-C EL

### 2.6.8.3 PE pipes acc. EN 15494, EN12201-2 and DIN 8074/75

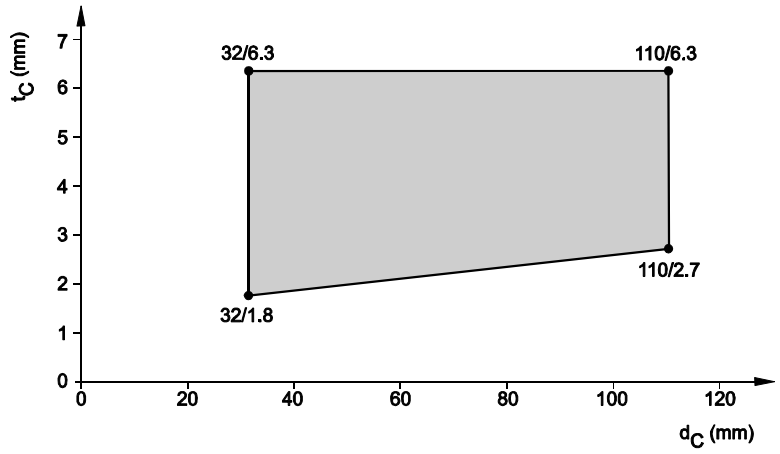


Approved pipe range for EI90-U/U,

penetrating Hilti Firestop Boards CFS-CT B 1S in rigid floor, ($t_E$ > 150mm), according to 2.1.e), sealed with Hilti Firestop Collar CFS-C EL

### 2.6.8.4 PVC pipes acc. EN 1452-1, EN1329-1, EN1453-1, EN 1566-1, EN ISO 15493 and DIN 8061/62

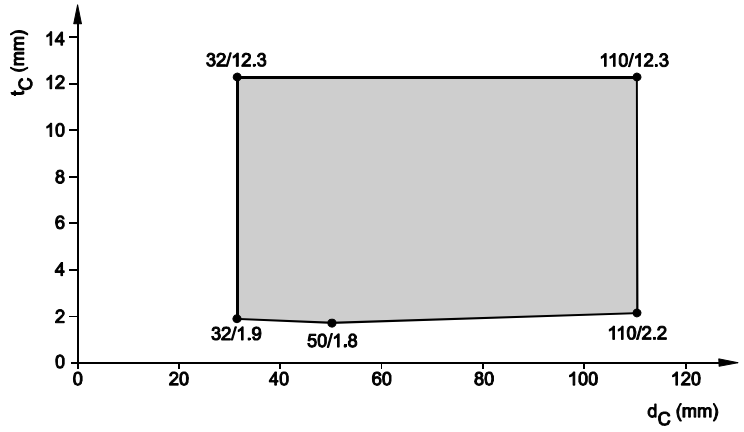


Approved pipe range for EI90-U/U,

penetrating Hilti Firestop Boards CFS-CT B 1S in rigid floor, ($t_E$ > 150mm), according to 2.1.e), sealed with Hilti Firestop Collar CFS-C EL

### 2.6.8.5 PP pipes, non-regulated

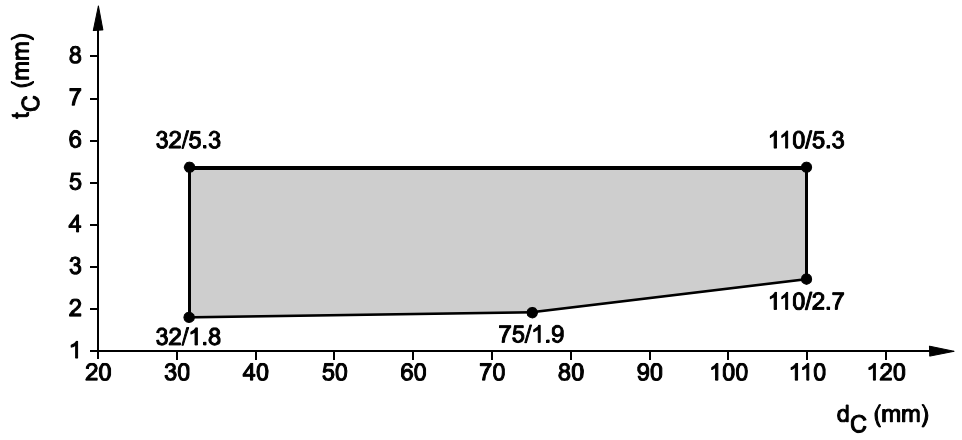


Approved pipe range for EI90-U/U,

penetrating Hilti Firestop Boards CFS-CT B 1S in rigid floor, ($t_E$ > 150mm), according to 2.1.e), sealed with Hilti Firestop Collar CFS-C EL

The following types of mineral reinforced non-regulated PP-pipes are approved: refer to 2.1.6

### 2.6.8.6 PP pipes acc. EN 1451-1 and DIN 8077/78

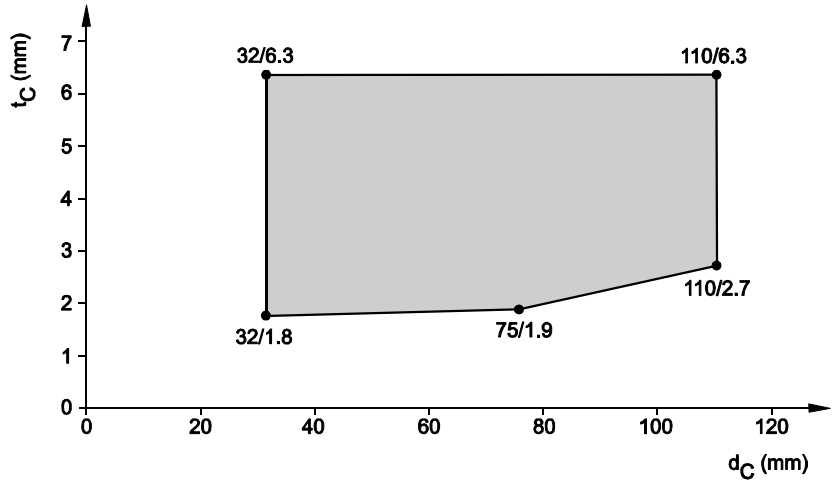


Approved pipe range for EI90-U/U,

penetrating Hilti Firestop Boards CFS-CT B 1S in rigid floor,($t_E$ > 150mm), according to 2.1.e), sealed with Hilti Firestop Collar CFS-C EL

### 2.6.8.7 PE pipes, non-regulated (Geberit Silent dB20)

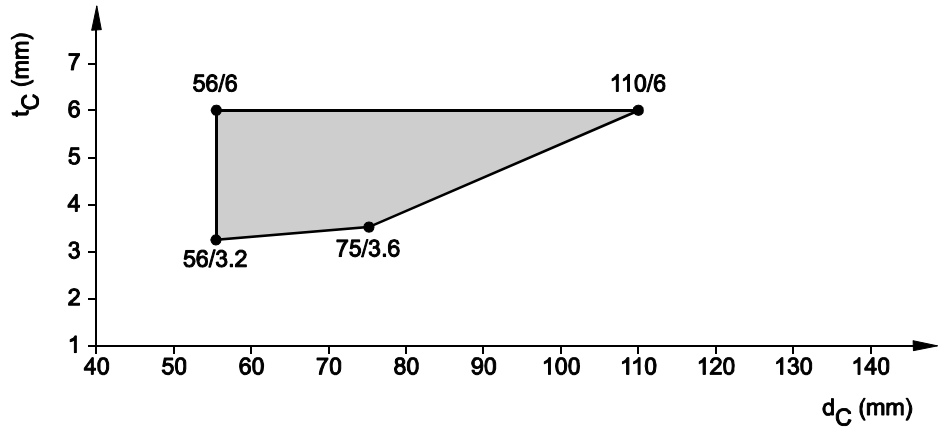


Approved pipe range for EI90-U/U,

penetrating Hilti Firestop Boards CFS-CT B 1S in rigid floor, ($t_E$ > 150mm), according to 2.1.e), sealed with Hilti Firestop Collar CFS-C EL

### 2.6.8.8 PVC-pipes, non-regulated (Friatec Friaphon)

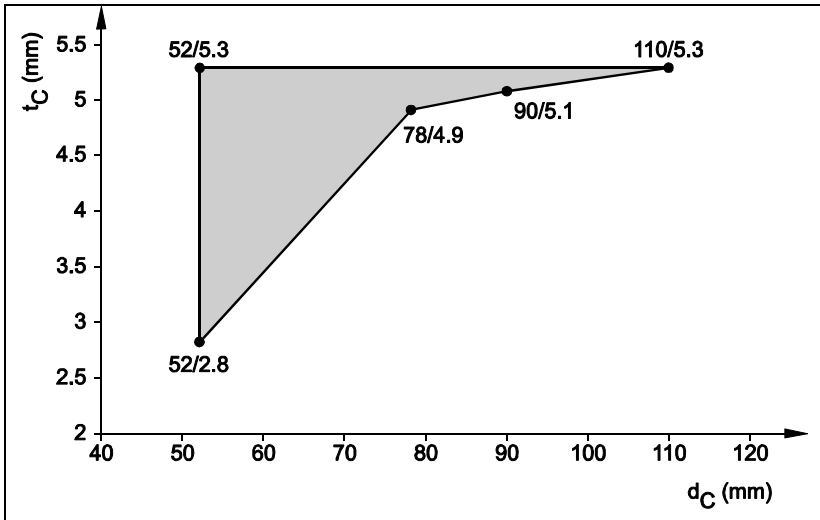


Approved pipe range for EI90-U/U,

penetrating Hilti Firestop Boards CFS-CT B 1S in rigid floor, ($t_E$ > 150mm), according to 2.1.e), sealed with Hilti Firestop Collar CFS-C EL

## 2.6.9 Plastic pipes with Hilti Firestop Wrap CFS-W

Construction details

(for symbols and abbreviations see Annex 4):

Hilti Firestop Wrap CFS-W EL or SG ($A_4$) is wrapped around the pipe on bottom side of the seal and positioned within the annular gap so that the outer edge of the wrap is flush with the surface of the floor as specified in Annex 1.2.

In some cases an additional protection is required:

$AP_9$: Mineral wool board according to Table installed around the pipe in the air gap between the two boards of the Hilti Firestop Double Board Seal.
Width around the pipe 100 mm,
thickness 50 mm (height of the air gap).

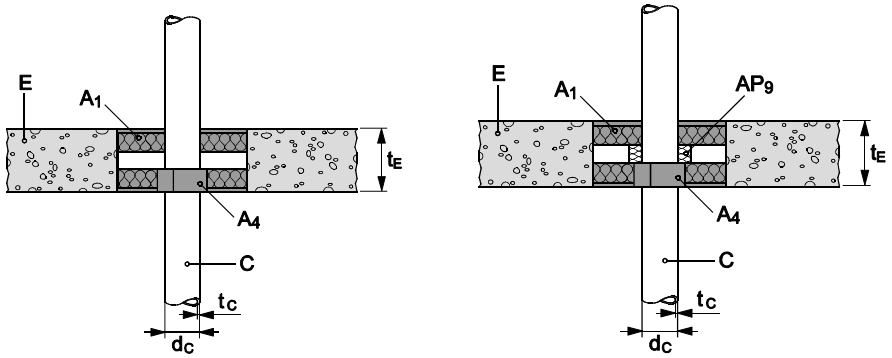


### 2.6.9.1 PVC-U pipes with Hilti Firestop Wrap CFS-W

| **PVC-U pipes (C) according to EN ISO 1452-2, EN ISO 15493, DIN 8061/8062 – U/C** | | | | |
|---|---|---|---|---|
| Pipe diameter ($d_c$) [mm] | Pipe wall thickness $t_c$ [mm] | Wrap type ($A_4$) | Size (CFS-W SG) No. of layers (CFS-W EL) | Classification |
| | | | Additional protection | - |
| 75 | 3.6 | CFS-W SG | 75/2.5” | EI 90-U/C |
| 125 | 6.0 | CFS-W SG | 125/5” | EI 90-U/C |
| The results are also valid for PVC-U pipes according EN 1329-1[16] and EN 1453-1[17] and PVC-C pipes according EN 1566-1. | | | | |

| **PVC-U pipes (C) according to EN ISO 1452-2, EN ISO 15493, DIN 8061/8062 – C/U** | | | | |
|---|---|---|---|---|
| Pipe diameter ($d_c$) [mm] | Pipe wall thickness $t_c$ [mm] | Wrap type ($A_4$) | Size (CFS-W SG) No. of layers (CFS-W EL) | Classification |
| | | | Additional protection | $AP_9$ |
| ≤75 | 2.2 – 5.6 | CFS-W EL | 2 | EI 60-C/U |
| ≤75 | 5.6 | CFS-W EL | 2 | EI 90-C/U |

| PVC-U pipes, Georg Fischer “Dekadur”, DIN 8061/62<br>with additional protection AP9 see 2.6.5 and 2.6.6, offset = 80mm | | | | |
|---|---|---|---|---|
| Pipe diameter ($d_c$)<br>[mm] | Pipe wall thickness $t_c$<br>[mm] | Wrap type ($A_4$) | Size (CFS-W SG)<br>No. of layers (CFS-W EL) | Classification |
| 110 | 3,2 | CFS-W EL | 2 | EI 120-U/C |
| 160 | 4,7 | CFS-W EL | 3 | EI 120-U/C |

| | | | | |
|---|---|---|---|---|
| | | | | |
| >75 ≤ 110 | 2.2 – 8.1 | CFS-W EL | 2 | EI 60-C/U |
| The results are also valid for PVC-U pipes according EN 1329-1[16] and EN 1453-1[17] and PVC-C pipes according EN 1566-1. | | | | |

| | | | | |
|---|---|---|---|---|
| **2.6.9.2 PE pipes with Hilti Firestop Wrap CFS-W** | | | | |
| **2.6.8.2.1 PE pipes (C) according to EN 1519[18] - U/C Additional protection $AP_9$** | | | | |
| Pipe diameter ($d_c$) [mm] | Pipe wall thickness $t_c$ [mm] | Wrap type ($A_4$) | Size (CFS-W SG) No. of layers (CFS-W EL) | Classification |
| 75 | 3.0 | CFS-W SG | 75/2.5” | EI 90-U/C |
| ≤75 | 3.0 | CFS-W EL | 2 | EI 60-C/U |
| The results are also valid for PE pipes according to EN 12201-2 and EN 12666-1. | | | | |
| **2.6.8.2.2 PE pipes (C) according to EN ISO 15494, DIN 8074/8075 – U/U , Additional protection, $AP_9$** | | | | |
| Pipe diameter ($d_c$) [mm] | Pipe wall thickness $t_c$ [mm] | Wrap type ($A_4$) | Size (CFS-W SG) No. of layers (CFS-W EL) | Classification |
| ≤125 | 3.1 | CFS-W EL | 2 | EI 60-U/U |
| **PE pipes (C) according to EN ISO 15494, DIN 8074/8075 – U/C; Additional protection, $AP_9$** | | | | |
| Pipe diameter ($d_c$) [mm] | Pipe wall thickness $t_c$ [mm] | Wrap type ($A_4$) | Size (CFS-W SG) No. of layers (CFS-W EL) | Classification |
| 75 | 1.9 | CFS-W SG | 75/2.5” | EI 90-U/C |
| 110 | 2.7 | CFS-W SG | 110/4” | EI 90-U/C |
| 125 | 7.1 | CFS-W SG | 125/5” | EI 90-U/C |
| **PE pipes (C) according to EN ISO 15494, DIN 8074/8075 – C/U, Additional protection, $AP_9$** | | | | |
| Pipe diameter ($d_c$) [mm] | Pipe wall thickness $t_c$ [mm] | Wrap type ($A_4$) | Size (CFS-W SG) No. of layers (CFS-W EL) | Classification |
| ≤75 | 4.3 | CFS-W EL | 2 | EI 60-C/U |

| **2.6.8.2.3 PE-S2 pipes "Geberit Silent-db20"**<br>Manufacturer: Geberit Int. with additional protection AP9 see 2.6.5 and 2.6.6, offset = 80mm | | | | |
|---|---|---|---|---|
| Pipe diameter ($d_c$) [mm] | Pipe wall thickness $t_c$ [mm] | Wrap type ($A_4$) | Size (CFS-W SG)<br>No. of layers (CFS-W EL) | Classification |
| ≤75 | 3.6 | CFS-W EL | 2 | EI 120-C/U |
| 110 | 4,2 | CFS-W EL | 2 | EI 120-U/C |
| 160 | 6,2 | CFS-W EL | 3 | EI 120-U/C |
| **2.6.9.3 PP pipes according EN 1451-1 with Hilti Firestop Wrap CFS-W – C/U** | | | | |
| **2.6.8.3.1 PP pipes "Wavin AS" or "Phonex AS"**<br>Manufacturer: Wavin Ireland Ltd or KeKelit, Additional protection $AP_9$ | | | | |
| Pipe diameter ($d_c$) [mm] | Pipe wall thickness $t_c$ [mm] | Wrap type ($A_4$) | Size (CFS-W SG)<br>No. of layers (CFS-W EL) | Classification |
| ≤70 | 4.5 | CFS-W EL | 2 | EI 120-C/U |
| **2.6.8.3.2 PP/PP-MV/PP pipes "Polokal NG"**<br>Manufacturer: Poloplast. Additional protection $AP_9$ | | | | |
| Pipe diameter ($d_c$) [mm] | Pipe wall thickness $t_c$ [mm] | Wrap type ($A_4$) | Size (CFS-W SG)<br>No. of layers (CFS-W EL) | Classification |
| ≤75 | 2.6 | CFS-W EL | 2 | EI 120-C/U |
| **2.6.8.3.3 PP/Porolen/PP pipes "Polokal 3S"**<br>Manufacturer: Poloplast. Additional protection $AP_9$ | | | | |
| Pipe diameter ($d_c$) [mm] | Pipe wall thickness $t_c$ [mm] | Wrap type ($A_4$) | Size (CFS-W SG)<br>No. of layers (CFS-W EL) | Classification |
| ≤75 | 3.8 | CFS-W EL | 2 | EI 120-C/U |
| >75 ≤ 110 | 4.8 | CFS-W EL | 2 | EI 120-C/U |

| **2.6.8.3.4 PP-R pipes "Aquatherm Green pipe"**<br>with additional protection AP9 see 2.6.5 and 2.6.6, offset = 80mm | | | | |
|---|---|---|---|---|
| Pipe diameter ($d_c$)<br>[mm] | Pipe wall thickness $t_c$<br>[mm] | Wrap type ($A_4$) | Size (CFS-W SG)<br>No. of layers (CFS-W EL) | Classification |
| 110 | 10,0 | CFS-W EL | 2 | EI 120-U/C |

### 2.6.10 Plastic pipes with Hilti Firestop Wrap CFS-W P in rigid floor

**Rigid floors acc. 2.1g):**

The floor must have a minimum thickness of 150 mm and comprise aerated concrete or concrete with a minimum density of 450 kg/m$^3$.

Hilti Firestop Wrap CFS-W P ($A_1$) to be mounted on soffit of the Hilti Firestop Double Board Seal CFS-CT for seal design type i) and ii) see 2.6.10.1.. In case of seal design type iii), iv) and v) (refer to 2.6.10.1) the Hilti Firestop Wrap CFS-W P has to be installed from bottom and top side.

The bottom side wrap comes 5 mm further than the bottom surface of the board seal, and on top side the Hilti Firestop Wrap CFS-W P has to be installed flush with the top surface of the board seal.

Annular gap between the pipe sealing and the double board sealed with Hilti Firestop Acrylic Sealant CFS-S ACR – material ($A_6$): water based acrylic sealant.

The boards are placed into the opening of the floor construction. They are placed against each other and installed flush with the floor surface at the top side only.

Hilti Firestop Wrap CFS-W P is a graphite based strip with a width of 50mm and a thickness of 2mm. Used length depends from pipe diameter, insulation and construction group (CG).

The Hilti Firestop Wrap CFS-W P in floor installation is supported by Z-profiles (F) made of steel plate with a thickness from 0,5 mm and a width of 20 mm.The Z-profiles are constructed with a horizontal part of 70mm and 10mm and a vertical part of 55mm. Z-profiles (F) support the lower warp only. The upper one – if installed – has not to be supported.

Number of Z-profiles:

| Construction | Pipe material | Pipe diameter | Position of wrap CFS-W P | Number of Z-profiles | Position of Z-profiles |
|---|---|---|---|---|---|
| Floor | Plastic | ≤ 75 (mm) | At the bottom side if the floor | 2 | Installed in the bottom board position, holding the pipe sealing and at the other side located on the top surface of the lowest board, under the upper board |
| | | > 75 (mm) | | 3 | |
| | - Aluminium composite,<br>- Steel,<br>- Copper | All approved diameter | At the bottom and upper side of the floor | without | n.a. |

| | |
|---|---|
| 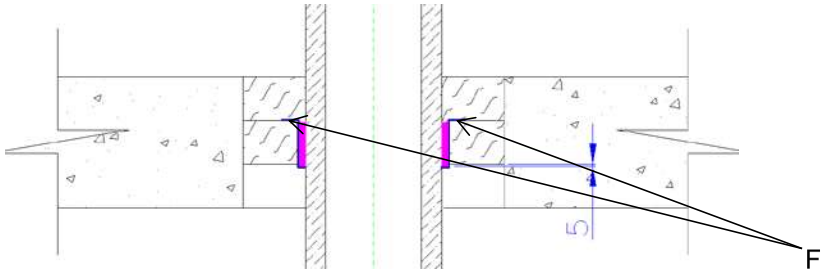 | Hilti CFS-CT Double board seal, penetrated with a plastic pipe according to 2.6.10.5, sealed with Hilti Firestop Wrap CFS-W P. If the floor thickness is bigger than 100mm, so boards are installed in direct contact to each other, flush with the upper floor surface only.<br><br>Z-profile is shown to be installed in between both boards, supporting the wrap. The wrap comes 5mm out of the seal on soffit side only. |

Pipes have to be supported on upside only, maximum 250mm above floor level.

### 2.6.10.1 Pipes, sealed with Hilti Firestop Wrap CFS-W P – seal design variations in floor

| Seal design type | | Sealing product ($A_1$) | | Annular sealing ($A_2$) | Principle drawings |
|---|---|---|---|---|---|
| **i)** | Uninsulated Plastic Pipe | CFS-W P | Standard number of layers | Acrylic sealant CFS-S ACR | 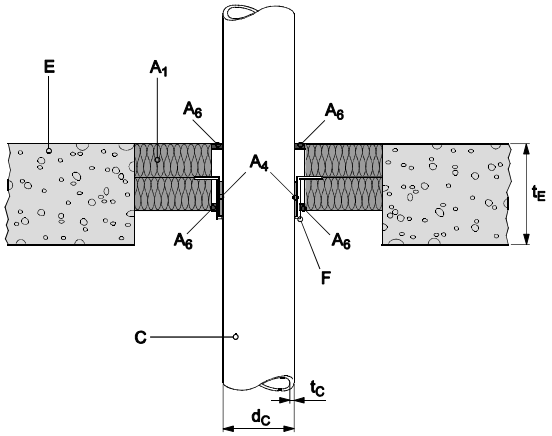 |
| **ii)** | Insulated Plastic Pipe | CFS-W P | Standard number of layers | Acrylic sealant CFS-S ACR | 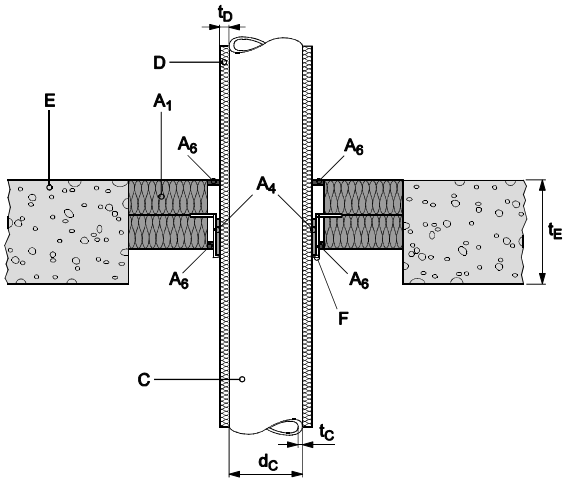 |

| | | | | | |
|---|---|---|---|---|---|
| **iii)** | Insulated (CS) Aluminium composite Pipe | CFS-W P | Standard number of layers | Acrylic sealant CFS-S ACR | 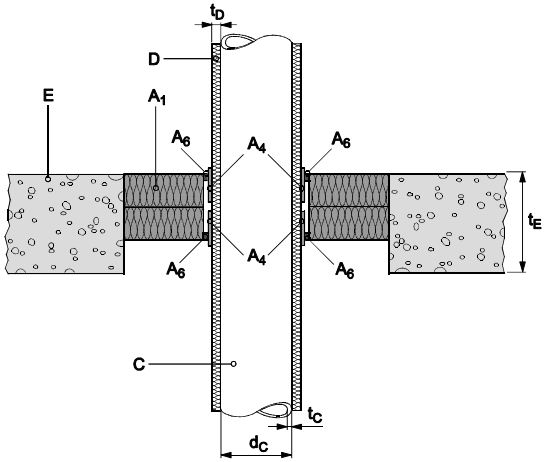 |
| **iv)** | Insulated (CS) Metal Pipe | CFS-W P | Standard number of layers | Acrylic sealant CFS-S ACR | 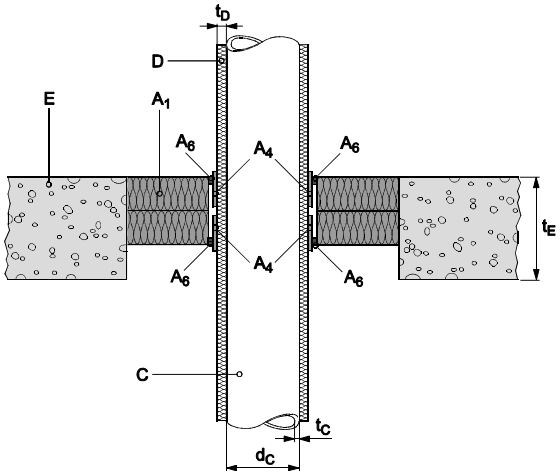 |

| | | | | | |
|---|---|---|---|---|---|
| **v)** | Insulated (CS) Metal Pipe with add. protection $D_2$ (200 mm) | CFS-W P | Standard number of layers | Acrylic sealant CFS-S ACR | 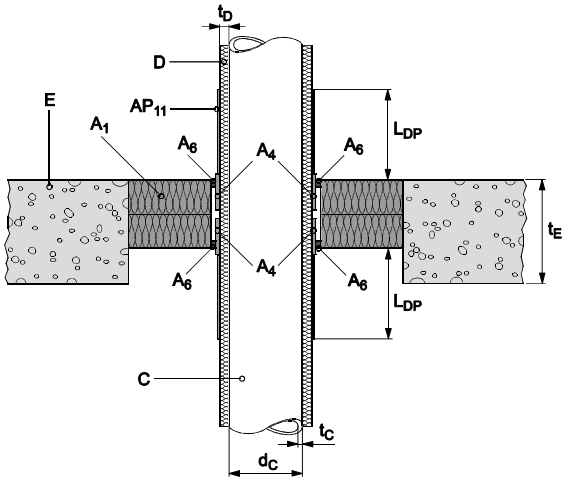 |

### 2.6.10.2 Pipe insulation

| Local/Sustained pipe insulation (LS) | Continued/Sustained pipe insulation (CS) |
|---|---|
| 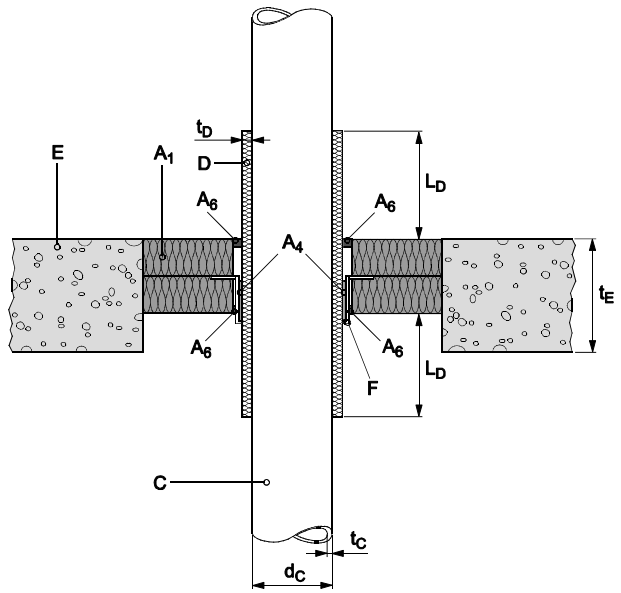 | 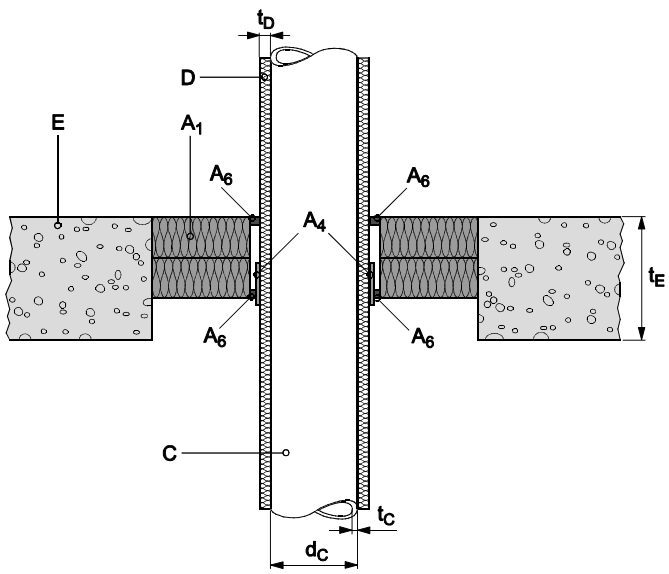 |

#### 2.6.10.3 Layer groups

There are several layer groups which defines the number of layers of the Hilti Firestop Wrap CFS-W P. The number of specific construction group (CG) = layer group relates always to the number of used layers of CFS-W P. (For instance; construction group 4 means always 4 wrapped layers of CFS-W P.)

Plastic pipes:

| Layer group | Diameter range (mm) | Number of layers |
|---|---|---|
| 2 | 32 – 56 | 2 |
| 3 | 63 – 75 | 3 |
| 4 | 90 – 125 | 4 |
| 5* | 90 – 110 | 5 |
| 6 | >135 – 160 | 6 |

* This construction group is only used for PE-pipes provided with Elastomeric insulation

Aluminium composite pipes:

If the pipe is used in a U/C pipe end configuration, following number of layers is to apply.

| Layer group | Diameter range (mm) | Number of layers |
|---|---|---|
| 1 | 16 to 40 | 1 |
| 2 | 56 to 75 | 2 |

Metal pipes:

If the pipe is used in a C/U pipe end configuration, following number of layers is to apply.

| Layer group | Diameter range (mm) | Number of layers |
|---|---|---|
| 1 | 10 to 42 | 1 |
| 2 | > 42 to 114 | 2 |
| 3 | > 114 to 219 | 3 |

#### 2.6.10.4 Separation of penetrations

For separations $a_2 - a_3$, please refer to the following clauses. General distance rules given in 2.2 are not valid for chapters 2.6.10, 2.6.11 and 2.6.12 (and their sub-chapters)

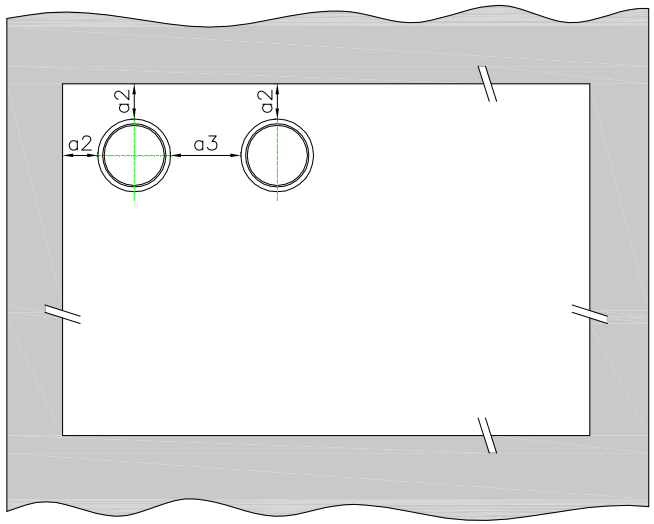


(View from above)

### 2.6.10.5 Plastic pipes sealed with Hilti Firestop Wrap CFS-W P penetrating a double board seal CFS-CT

#### 2.6.10.5.1 PE - pipes according to EN 1519-1, EN 12666-1, EN 12201-2 for EI 90-U/U

| PE pipes according to EN 1519-1, EN 12666-1, EN 12201-2, Seal design: i) according to 2.6.10.1 | | | | | |
|---|---|---|---|---|---|
| **Layers** | **Pipe diameter dc Ø (mm)** | **Pipe wall thickness tc (mm)** | **Separation a2 (mm)** | **Separation a3 (mm)** | **Classification** |
| 2 | 32 to 56 | 3,0 | 25 | 50 | **EI 90-U/U, E 90-U/U** |
| 3 | > 56 to 75 | 3,0 | 25 | 50 | |
| 4 | > 75 to 125 | 3,5 to 4,9 | 25 | 50 | |
| 6 | > 125 to 160 | 6,2 | 25 | 50 | |

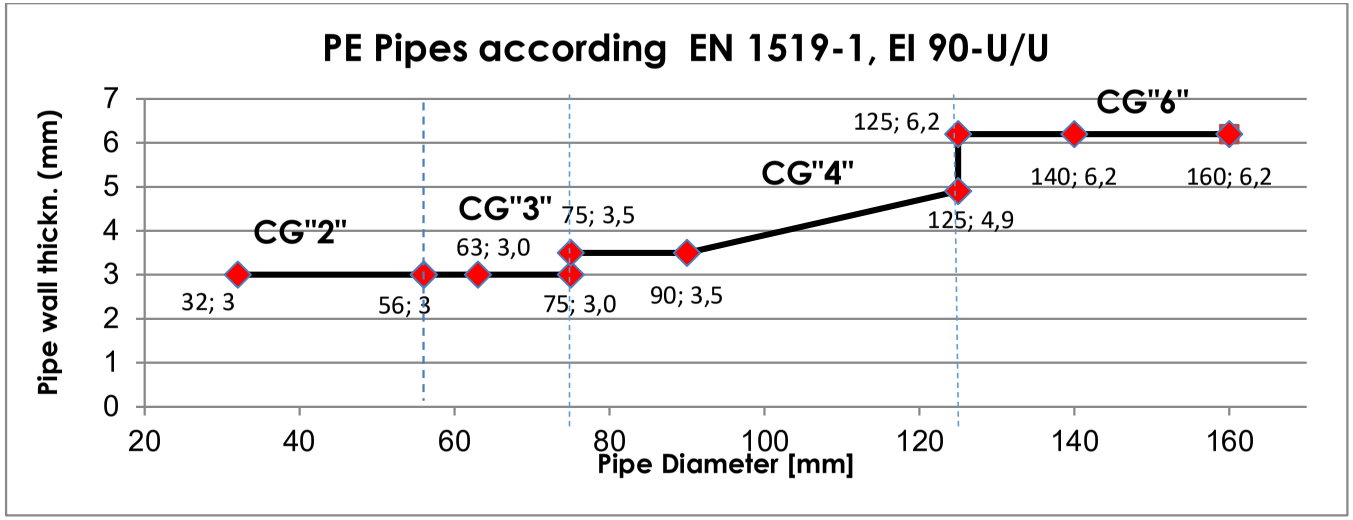

### 2.6.10.5.2 PE - pipes according to EN 1519-1, EN 12666-1, EN 12201-2 for EI 120-U/U

| For EI 120-U/U: PE pipes according to EN 1519-1, EN 12666-1, EN 12201-2, Seal design: i) according to 2.6.10.1 | | | | | |
|---|---|---|---|---|---|
| **Layers** | **Pipe diameter $d_c$ Ø (mm)** | **Pipe wall thickness $t_c$ (mm)** | **Separation $a_2$ (mm)** | **Separation $a_3$ (mm)** | **Classification** |
| 2 | 32 to 56 | 3,0 | 50 | 100 | **EI 120-U/U, E 120-U/U** |
| 3 | > 56 to 75 | 3,0 | 50 | 100 | |
| 4 | > 75 to 90 | 3,5 | 50 | 100 | |
| 6 | 125 to 160 | 6,2 | 50 | 100 | |

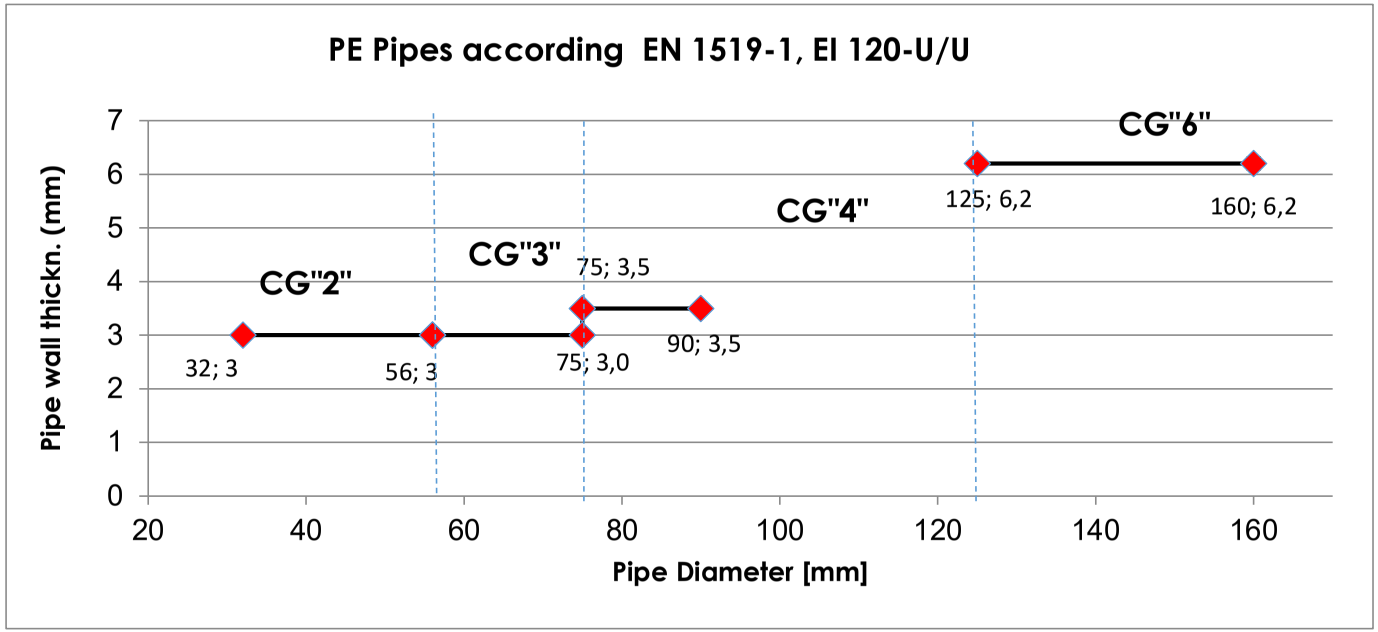

### 2.6.10.5.3 PE - pipes (isolated) according to EN 1519-1, EN 12666-1,EN 12201-2 for EI 90-U/U

| | PE pipes according to EN 1519-1, EN 12666-1, EN 12201-2, Seal design: ii) according to 2.6.10.1<br>Elastomeric insulation: refer to 2.2.11.2 | | | | | |
|---|---|---|---|---|---|---|
| **Layers** | **Pipe diameter $d_c$ Ø (mm)** | **Pipe wall thickness $t_c$ (mm)** | **Pipe insulation thickness (mm)** | **Separation $a_2$ (mm)** | **Separation $a_3$ (mm)** | **Classification** |
| 2 | 32 - 56 | 3,0 | 9,0 to 21,5 | 25 | 50 | **EI 90-U/U,**<br>**E 90-U/U** |
| 4 | > 56 - 75 | 3,0 | 9,0/9,5 to 21,5/22,0 | 25 | 50 | |
| 5 | > 75 - 90 | 3,0 to 3,5 | 9,5 to 23,0 | 25 | 50 | |

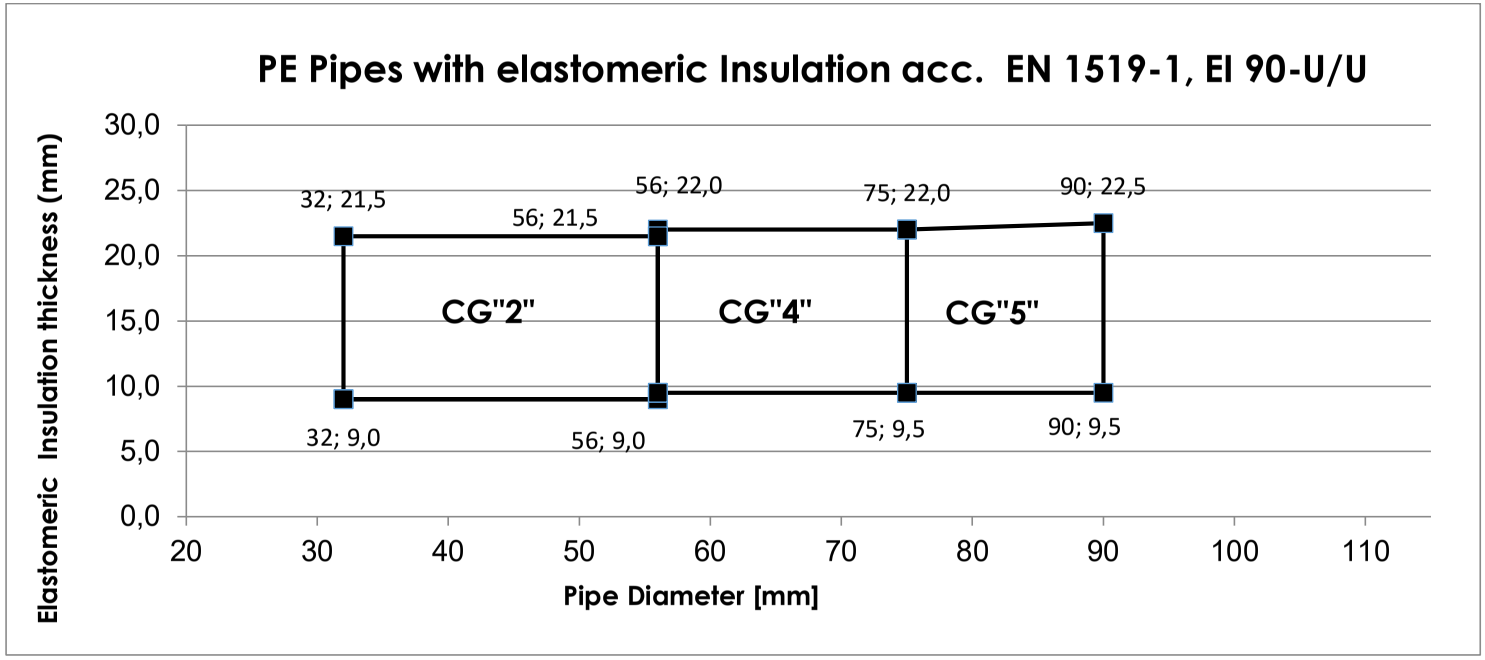

#### 2.6.10.5.4 PE – pipes (Geberit Silent dB20) for EI 90-U/U

| | PE pipes, designation Geberit Silent dB20, Seal design: i) according to 2.6.10.1 | | | | |
|---|---|---|---|---|---|
| **Layers** | **Pipe diameter $d_c$ Ø (mm)** | **Pipe wall thickness $t_c$ (mm)** | **Separation $a_2$ (mm)** | **Separation $a_3$ (mm)** | **Classification** |
| 2 | 56 | 3,2 | 25 | 50 | **EI 90-U/U, E 120-U/U** |
| 3 | > 56 to 75 | 3,2 to 3,6 | 25 | 50 | |
| 4 | > 75 to 110 | 3,6 to 6,0 | 25 | 50 | |
| 6 | > 110 to 160 | 6,0 to 7,0 | 25 | 50 | |

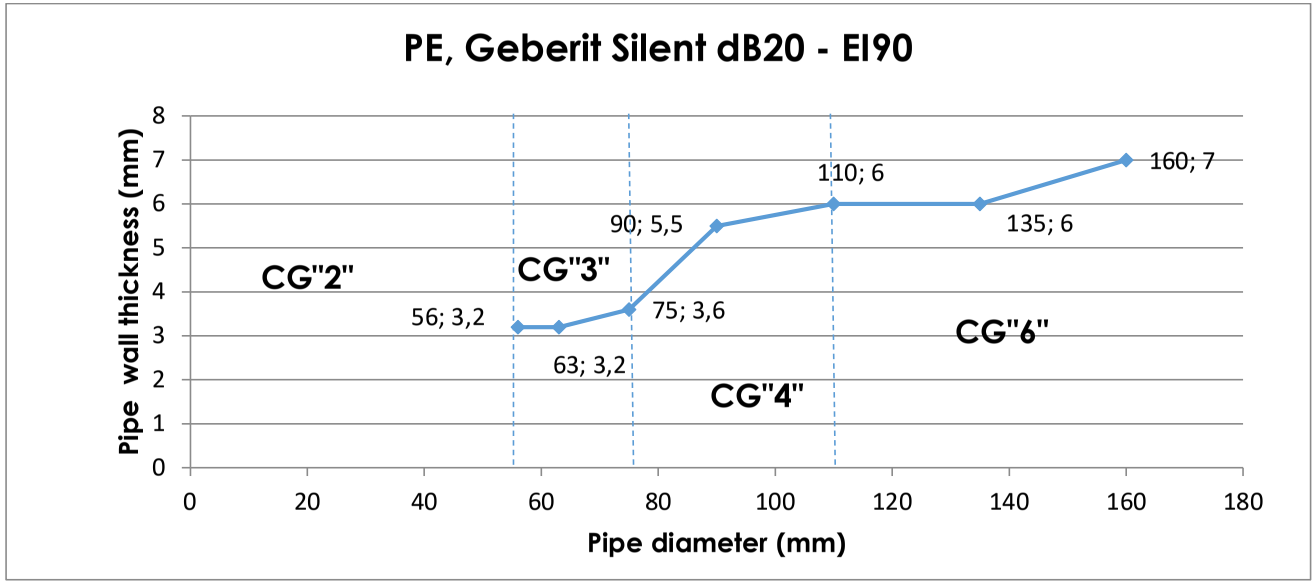

#### 2.6.10.5.5 PE – pipes (Geberit Silent dB20) for EI 120-U/U

| | PE pipes, designation Geberit Silent dB20, Seal design: i) according to 2.6.10.1 | | | | |
|---|---|---|---|---|---|
| **Layers** | **Pipe diameter $d_c$ Ø (mm)** | **Pipe wall thickness $t_c$ (mm)** | **Separation $a_2$ (mm)** | **Separation $a_3$ (mm)** | **Classification** |
| 3 | 63 to 75 | 3,2 to 3,6 | 25 | 50 | **EI 120-U/U, E 120-U/U** |
| 4 | > 75 to 110 | 3,6 to 6,0 | 25 | 50 | |
| 6 | > 110 to 160 | 6,0 to 7,0 | 25 | 50 | |

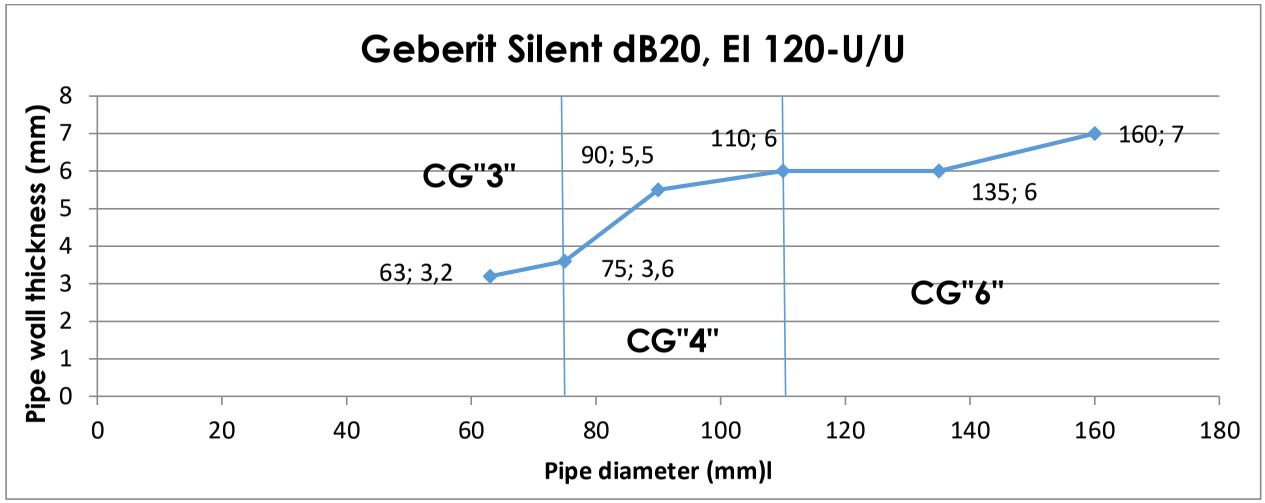

### 2.6.10.5.6 PE – pipes according EN 15494 for EI 90-U/C

| | PE pipes acc.EN 15494, Seal design: i) according to 2.6.10.1 | | | | |
|---|---|---|---|---|---|
| **Layers** | **Pipe diameter $d_c$ Ø (mm)** | **Pipe wall thickness $t_c$ (mm)** | **Separation $a_2$ (mm)** | **Separation $a_3$ (mm)** | **Classification** |
| 2 | 32 (1,8/6,9) to 50 (1,8/6,9) | | 25 | 25 | **EI 90-U/C, E 90-U/C** |
| 3 | > 50 (1,8/6,8) to 63 (1,8/6,8) to 75 (1,9/6,8) | | 25 | 25 | |
| 4 | > 75 (1,9/6,8) to 90 (2,2/7,1) to 125 (3,1/7,1) | | 25 | 25 | |
| 6 | > 125 (3,5/9,1) to 140 (3,5/9,1) to 160 (4,0/9,1) | | 25 | 25 | |

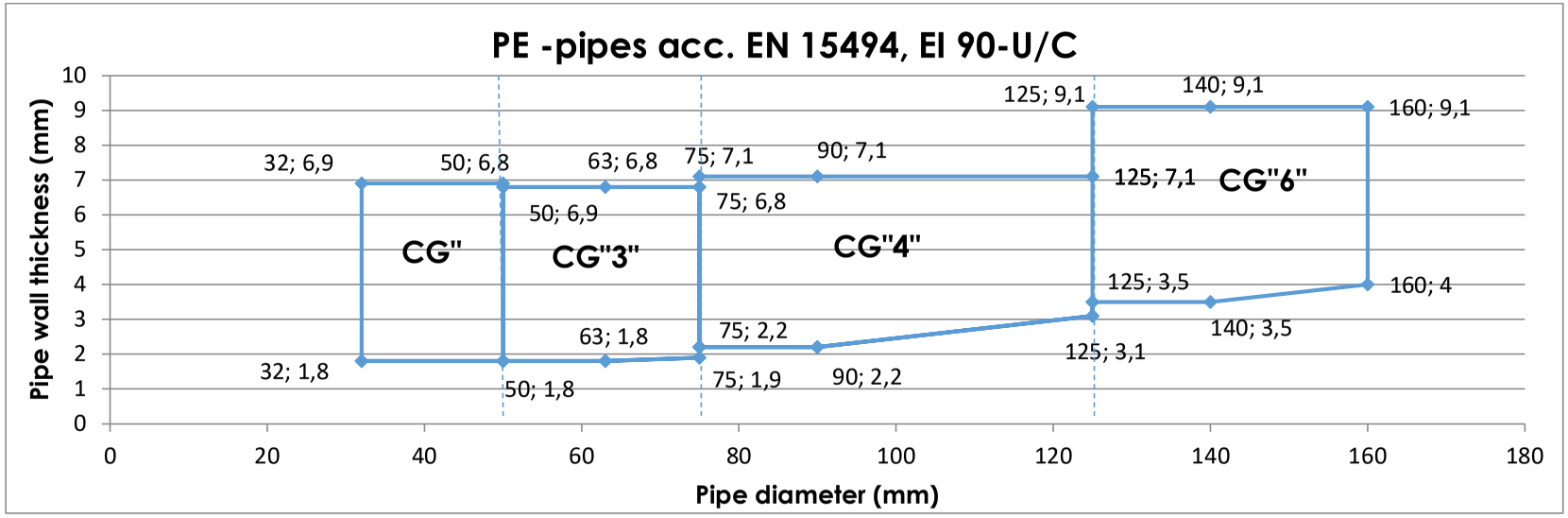

### 2.6.10.5.7 PE pipes according EN 15494 for EI 120-U/C

| | PE pipes acc.EN 15494, Seal design: i) according to 2.6.10.1 | | | | |
|---|---|---|---|---|---|
| **Layers** | **Pipe diameter $d_c$ Ø (mm)** | **Pipe wall thickness $t_c$ (mm)** | **Separation $a_2$ (mm)** | **Separation $a_3$ (mm)** | **Classification** |
| 2 | 32 (1,8/4,6) to Ø50 (1,8/4,6) | | 50 | 25 | **EI 120-U/C, E 120-U/C** |
| 3 | > 50 (1,8/6,8) to 63 (1,8/6,8) to 75 (1,9/6,8) | | 50 | 25 | |
| 4 | > 75 (2,2/7,1) to 90 (2,2/7,1) to 125 (3,1/7,1) | | 50 | 25 | |
| 6 | > 125 to 140 | 3,5 to 9,1 | 50 | 25 | |
| 6 | 160 | 9,1 | 50 | 25 | |

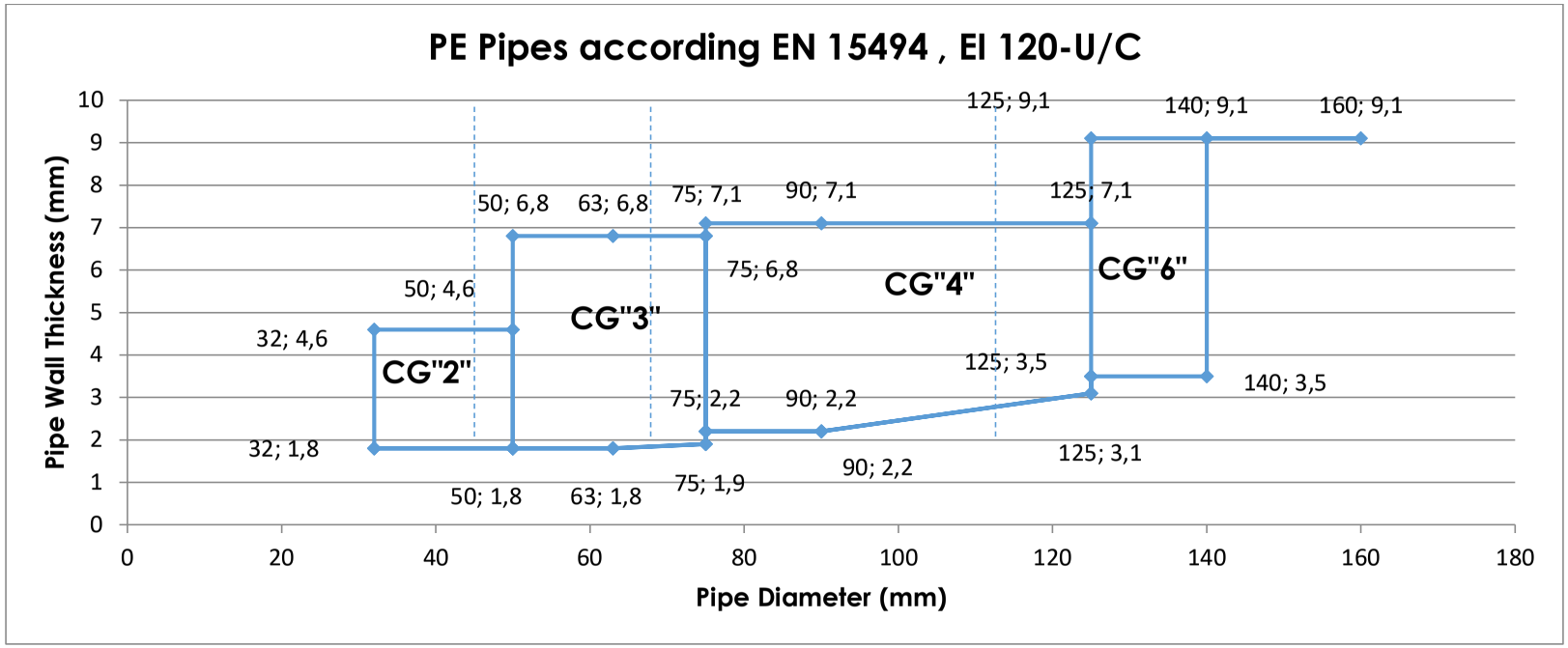

### 2.6.10.5.8 PP-pipes, non-regulated, for EI 90-U/U

| | PP acoustic pipes,non-regulated, Seal design: i) according to 2.6.10.1<br>For pipe designation: refer to 2.1.6 | | | | |
|---|---|---|---|---|---|
| **Layers** | **Pipe diameter $d_c$ Ø (mm)** | **Pipe wall thickness $t_c$ (mm)** | **Separation $a_2$ (mm)** | **Separation $a_3$ (mm)** | **Classification** |
| 2 | 32 (1,8/4,0) to 50 (1,8/4,0) to 58 (4,0/4,0) | | 25 | 50 | **EI 90-U/U,**<br>**E 120-U/U** |
| 3 | 58 (1,9/3,8) to 75 (1,9/3,8) | | 25 | 50 | |
| 4 | > 75 (2,2/5,3) to 90 (2,2/5,3) to 125 (3,1/5,3) | | 25 | 50 | |
| 6 | > 125 (3,9/7,5) to 160 (3,9/7,5) | | 25 | 50 | |

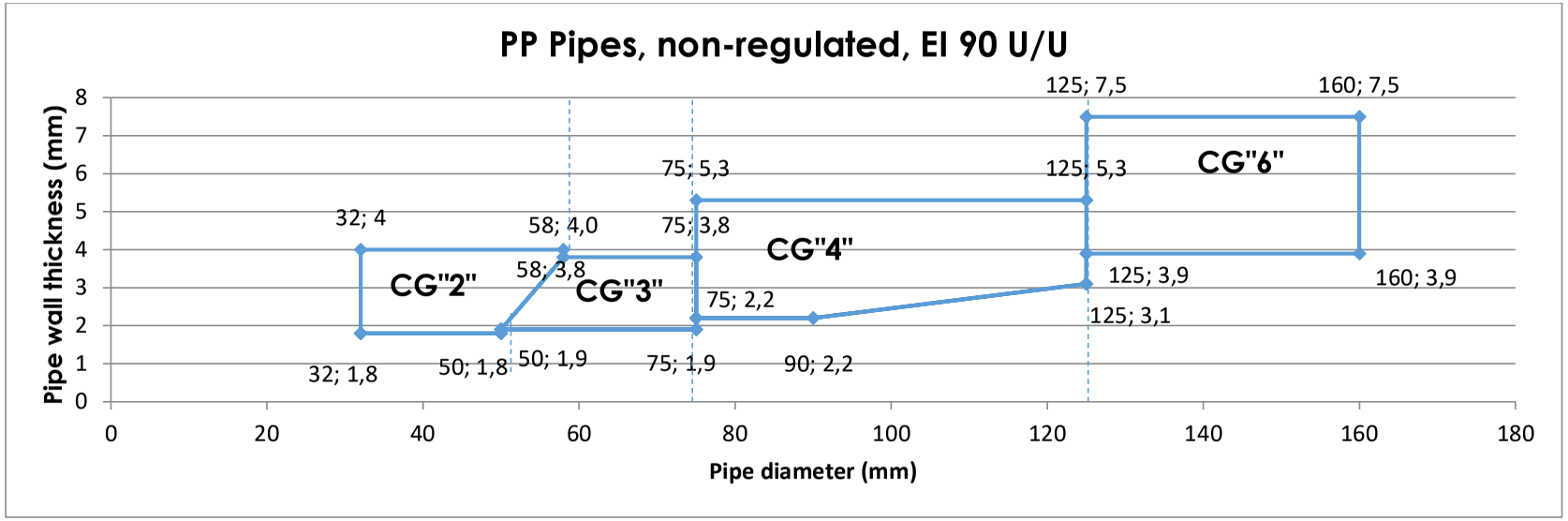

### 2.6.10.5.9 PP-pipes, non-regulated, for EI 120-U/U

| | PP acoustic pipes,non-regulated, Seal design: i) according to 2.6.10.1<br>For pipe designation: refer to 2.1.6 | | | | |
|---|---|---|---|---|---|
| **Layers** | **Pipe diameter $d_c$ Ø (mm)** | **Pipe wall thickness $t_c$ (mm)** | **Separation $a_2$ (mm)** | **Separation $a_3$ (mm)** | **Classification** |
| 2 | 32 (1,8/4,0) to 50 (1,8/4,0) to 58 (4,0/4,0) | | 50 | 100 | **EI 120-U/U,**<br>**E 120-U/U** |
| 3 | 58 (1,9/3,8) to 75 (1,9/3,8) | | 50 | 100 | |
| 4 | >75 (2,2/5,3) to 90 (2,2/5,3) to 125 (3,1/5,3) | | 50 | 100 | |
| 6 | > 125 (3,9/7,5) to 160 (3,9/7,5) | | 50 | 100 | |

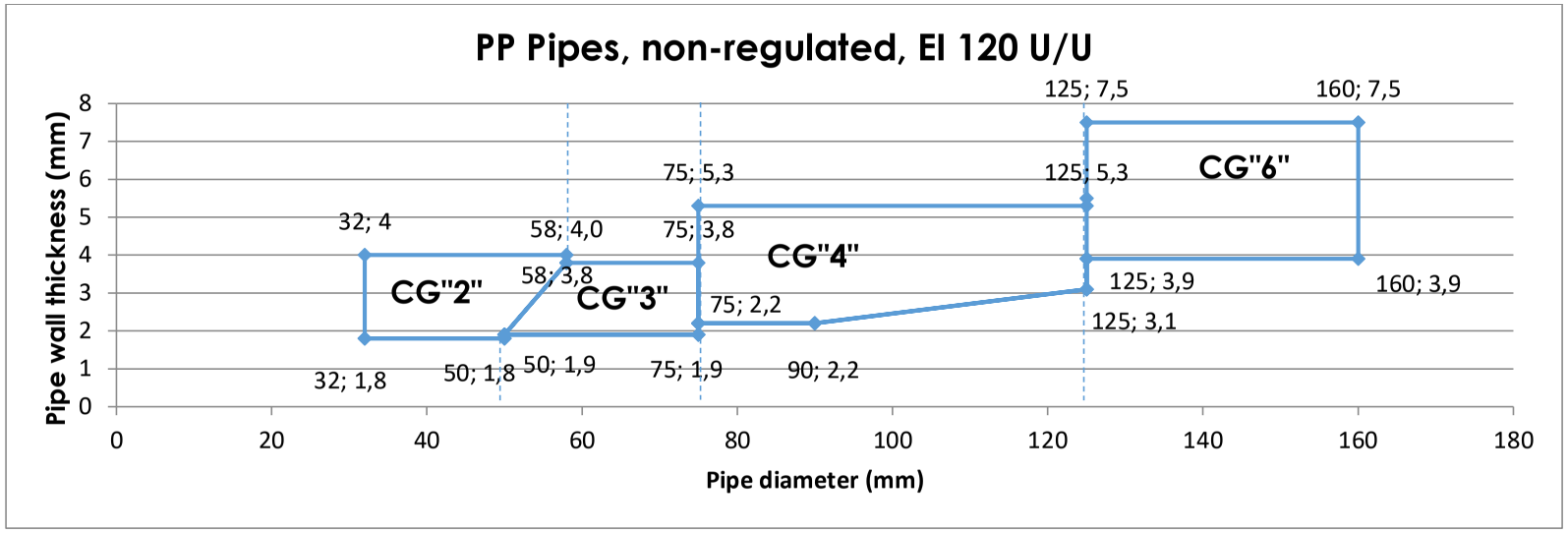

### 2.6.10.5.10 PVC-pipes according EN 1452-1 for EI 90-U/U

| | PVC-pipes according to EN 1452-1, Seal design: i) according to 2.6.10.1 | | | | |
|---|---|---|---|---|---|
| **Layers** | **Pipe diameter $d_c$ Ø (mm)** | **Pipe wall thickness $t_c$ (mm)** | **Separation $a_2$ (mm)** | **Separation $a_3$ (mm)** | **Classification** |
| 2 | 32 (1,8/5,6) to 50 (1,8/5,6) | | 25 | 50 | **EI 90-U/U, E 120-U/U** |
| 3 | > 50 (2,2/5,6) to 75 (2,2/5,6) | | 25 | 50 | |
| 4 | > 75 (2,2/9,3) to 110 (2,2/9,3) to 125 (2,5/9,3) | | 25 | 50 | |
| 6 | > 125 (2,8/6,7) to 140 (2,8/6,7) | | 25 | 50 | |
| 6 | 160 | 3,2 | 25 | 50 | |

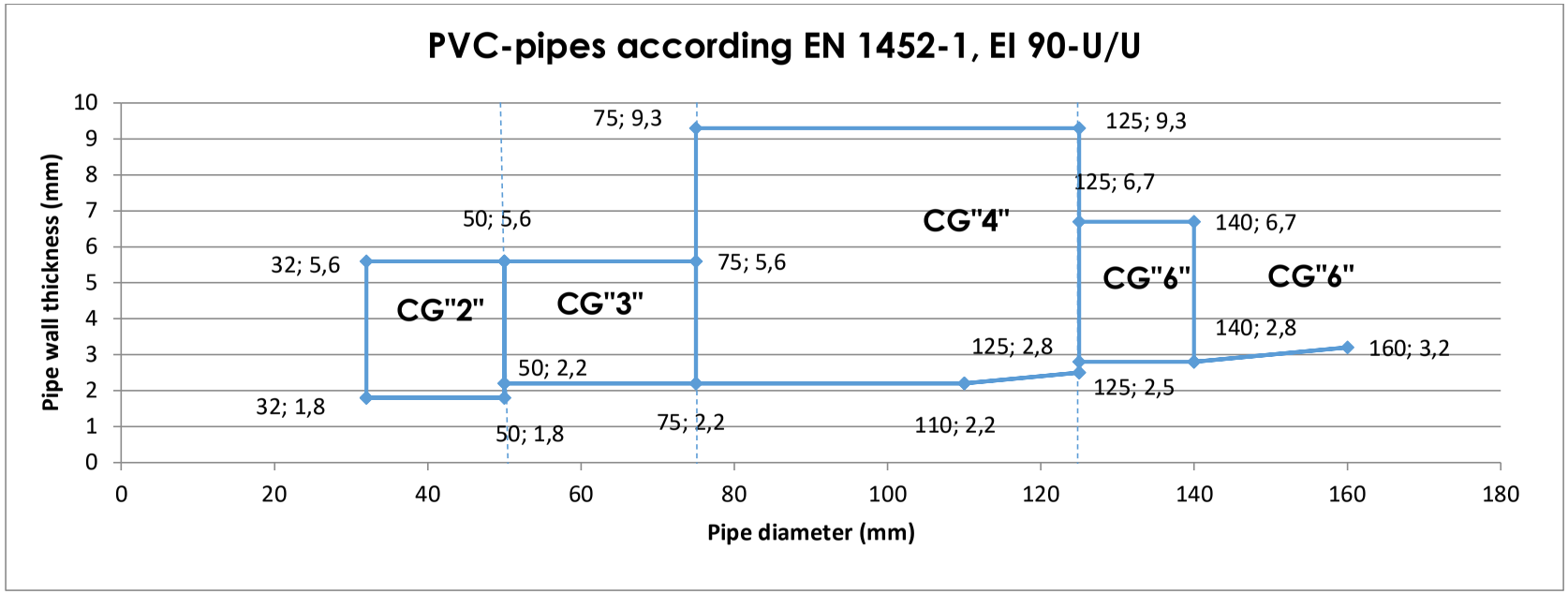

### 2.6.10.5.11 PVC-pipes according EN 1452-1 for EI 120-U/C

| | PVC-pipes according to EN 1452-1, Seal design: i) according to 2.6.10.1 | | | | |
|---|---|---|---|---|---|
| **Layers** | **Pipe diameter $d_c$ Ø (mm)** | **Pipe wall thickness $t_c$ (mm)** | **Separation $a_2$ (mm)** | **Separation $a_3$ (mm)** | **Classification** |
| 2 | 32 (1,8/5,6) to 50 (1,8/5,6) to 75 (2,2/5,6) | | 25 | 50 | **EI 120-U/C, E 120-U/U** |
| 4 | > 75 (2,2/9,3) to 125 (2,5/9,3) to 140 (2,5/7,7) to 160 (2,5/7,7) | | 25 | 50 | |

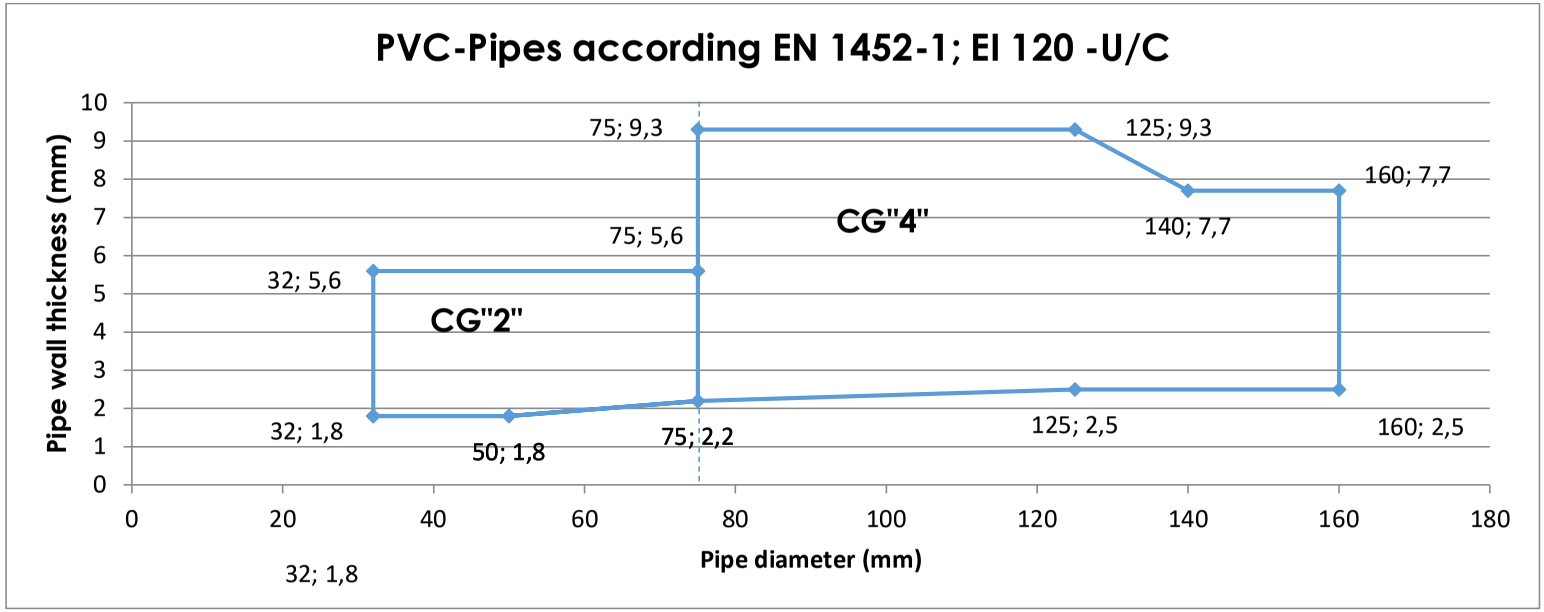

**2.6.10.5.12. Geberit PushFit PB**

| | Material: PB,<br>Seal design: ii) according to 2.6.10.1<br><br>Approved pipe insulation material (CS): flexible elastomeric insulation see 2.2.11.2, distances: $S_8 \geq$ 100mm, $S_6 \geq$50mm (see 2.2) | | | | | | |
|---|---|---|---|---|---|---|---|
| Layers | Pipe diameter Ø<br>dc (mm) | Pipe wall thickness tc (mm) | Pipe insulation<br>Material: | Pipe insulation thickness (mm) | Addtitional Protect Insulation Material: | Addtitional Protect Insulation thickness (mm) | Classification |
| 3 | 20 | 2,0 | Elastomer, see 2.2.11.2 | 8,5 to 25,0 | none | 0 | **EI 120-U/C** |
| 3 | 25 | 2,5 | Elastomer, see 2.2.11.2 | 9,0 to 27,0 | none | 0 | **EI 120-U/C** |
| | Approved pipe insulation material (LS, total length: $\geq$ 650mm): PE hardcover Geberit for Geberit PushFit PB | | | | | | |
| 1 | 20 | 2,0 | PE-foam | 6 | none | 0 | **EI 120-U/C** |
| 1 | 25 | 2,5 | PE-foam | 6 | none | 0 | **EI 120-U/C** |

## 2.6.11 Aluminium composite pipes with elastomeric insulation, penetrating CFS-CT double board seal, provided with Hilti firestop wrap CFS-W P and gap filler in floor

### 2.6.11.1 Rehau Rautitan Stabil, penetrating CFS-CT, sealed with CFS-W P

| | Classification : **EI 90-U/C**, **E120-U/C**<br>Material: PE-Xa/AL/PE-HD, seal type iii) according 2.6.10.1 , Approved pipe insulation material: see 2.2.11.2 | | | | | |
|---|---|---|---|---|---|---|
| Layers | Pipe diameter Ø dc (mm) | Pipe wall thickness tc (mm) | Pipe insulation thickness (mm) | Separation a2 (mm) | Separation a3 (mm) | Classification |
| 1 | 16 | 2,6 | 8,0 to 32,0 | 25 | 0 | **EI 90-U/C, E 120** |
| 1 | 20 | 2,9 | 8,5 to 33,5 | 25 | 0 | |
| 1 | 25 | 3,7 | 8,5 to 35,0 | 25 | 0 | |
| 1 | 32 | 4,7 | 9,0 to 35,0 | 25 | 0 | |
| 1 | 40 | 6,0 | 9,0 to 35,0 | **25** | **0** | |

| | Classification : **EI 120-U/C, E 120-U/C**<br>Material: PE-Xb/AL/PE-HD, seal type iii) according 2.6.10.1 , Approved pipe insulation material: see 2.2.11.2 | | | | | |
|---|---|---|---|---|---|---|
| Layers | Pipe diameter Ø dc (mm) | Pipe wall thickness tc (mm) | Pipe insulation thickness (mm) | Separation a2 (mm) | Separation a3 (mm) | Classification |
| 1 | 16 | 2,6 | 8,0 to 32,0 | 50 | 50 | **EI 120-U/C, E 120-U/C** |
| 1 | 20 | 2,9 | 8,5 to 33,5 | 50 | 50 | |
| 1 | 25 | 3,7 | 8,5 to 35,0 | 50 | 50 | |
| 1 | 32 | 4,7 | 9,0 to 35,0 | 50 | 50 | |
| 1 | 40 | 6,0 | 9,0 to 35,0 | 50 | 50 | |

### 2.6.11.2 Uponor MLC, penetrating CFS-CT, sealed with CFS-W P

| | Classification : **EI 90-U/C**, **E 120-U/C**<br>Material: PE-RT/AL/PE-RT, seal type iii) according 2.6.10.1 , Approved pipe insulation material: see 2.2.11.2 | | | | | |
|---|---|---|---|---|---|---|
| Layers | Pipe diameter Ø dc (mm) | Pipe wall thickness tc (mm) | Pipe insulation thickness (mm) | Separation a2 (mm) | Separation a3 (mm) | Classification |
| 1 | 16 | 2,0 | 8,0 to 32,0 | 25 | 0 | **EI 90-U/C, E 120-U/C** |
| 1 | 20 | 2,25 | 8,5 to 33,5 | 25 | 0 | |
| 1 | 25 | 2,5 | 8,5 to 35,0 | 25 | 0 | |
| 1 | 32 | 3,0 | 9,0 to 35,0 | 25 | 0 | |
| 2 | 50 | 4,5 | 9,0 to 38,0 | 25 | 0 | |
| 2 | 63 | 6,0 | 9,5 to 39,5 | 25 | 0 | |
| 2 | 75 | 7,5 | 9,5 to 40,5 | 25 | 0 | |
| | Classification : **EI 120-U/C, E 120-U/C**<br>Material: PE-RT/AL/PE-RT, seal type iii) according 2.6.10.1 , Approved pipe insulation material: see 2.2.11.2 | | | | | |
| Layers | Pipe diameter Ø dc (mm) | Pipe wall thickness tc (mm) | Pipe insulation thickness (mm) | Separation a2 (mm) | Separation a3 (mm) | Classification |
| 1 | 16 | 2,0 | 8,0 to 32,0 | 50 | 50 | **EI 120-U/C E 120-U/C** |
| 1 | 20 | 2,25 | 8,5 to 33,5 | 50 | 50 | |
| 1 | 25 | 2,5 | 8,5 to 35,0 | 50 | 50 | |
| 1 | 32 | 3,0 | 9,0 to 35,0 | 50 | 50 | |
| 2 | 50 | 4,5 | 9,0 to 38,0 | 25 | 0 | |
| 2 | 63 | 6,0 | 9,5 to 39,5 | 25 | 0 | |
| 2 | 75 | 7,5 | 9,5 to 40,5 | 25 | 0 | |

### 2.6.11.3 Kekelit Kelox, penetrating CFS-CT, sealed with CFS-W P

| | Classification : **EI 90-U/C**, **E120-U/C**<br>Material: PE-X/AL/PE-X, seal type iii) according 2.6.10.1, Approved pipe insulation material: see 2.2.11.2 | | | | | |
|---|---|---|---|---|---|---|
| Layers | Pipe diameter Ø dc (mm) | Pipe wall thickness tc (mm) | Pipe insulation thickness (mm) | Separation a2 (mm) | Separation a3 (mm) | Classification |
| 1 | 16 | 2,0 | 8,0 to 32,0 | 25 | 0 | **EI 90-U/C, E 120-U/C** |
| 1 | 20 | 2,25 | 8,5 to 33,5 | 25 | 0 | |
| 1 | 25 | 2,5 | 8,5 to 35,0 | 25 | 0 | |
| 1 | 32 | 3,0 | 9,0 to 35,0 | 25 | 0 | |
| 2 | > 32 | > 3,0 | 9,0 to 35,0 | 25 | 0 | |
| 2 | 75 | 7,5 | 9,5 to 35,0 | 25 | 0 | |

| | Classification : **EI 120-U/C**<br>Material: PE-X/AL/PE-X, seal type iii) according according 2.6.10.1, Approved pipe insulation material: see 2.2.11.2 | | | | | |
|---|---|---|---|---|---|---|
| Layers | Pipe diameter Ø dc (mm) | Pipe wall thickness tc (mm) | Pipe insulation thickness (mm) | Separation a2 (mm) | Separation a3 (mm) | Classification |
| 1 | 16 | 2,0 | 8,0 to 32,0 | 25 | 50 | **EI 120-U/C, E 120-U/C** |
| 1 | 20 | 2,25 | 8,5 to 33,5 | 25 | 50 | |
| 1 | 25 | 2,5 | 8,5 to 35,0 | 25 | 50 | |
| 1 | 32 | 3,0 | 9,0 to 35,0 | 25 | 50 | |
| 2 | > 32 | > 3,0 | 9,0 to 35,0 | 25 | 50 | |
| 2 | 75 | 7,5 | 9,5 to 35,0 | 25 | 50 | |

### 2.6.11.4 Geberit Mepla, penetrating CFS-CT, sealed with CFS-W P

| | Classification : **EI 90-U/C**, **E120-U/C**<br>Material: PE-Xb/AL/PE-HD, seal type iii) according 2.6.10.1<br>Approved pipe insulation material: see 2.2.11.2 | | | | | |
|---|---|---|---|---|---|---|
| Layers | Pipe diameter Ø dc (mm) | Pipe wall thickness tc (mm) | Pipe insulation thickness (mm) | Separation a2 (mm) | Separation a3 (mm) | Classification |
| 1 | 16 | 2,3 | 8,0 to 32,0 | 25 | 0 | **EI 90-U/C, E 120-U/C** |
| 1 | 20 | 2,5 | 8,5 to 33,5 | 25 | 0 | |
| 1 | 26 | 3,0 | 8,5 to 35,0 | 25 | 0 | |
| 1 | 32 | 3,0 | 9,0 to 35,0 | 25 | 0 | |
| 2 | 40 | 3,5 | 9,0 to 36,5 | 25 | 0 | |
| 2 | 50 | 4,0 | 9,0 to 38,0 | 25 | 0 | |
| 2 | 63 | 4,5 | 9,5 to 39,5 | 25 | 0 | |
| 2 | 75 | 4,7 | 9,5 to 40,5 | 25 | 0 | |

### 2.6.11.5 Viega Sanfix Fosta and Viega Raxofix, penetrating CFS-CT, sealed with CFS-W P

| | Material: PE-Xc/AL/PE-Xc, seal type iii) according 2.6.10.1<br>Approved pipe insulation material (CS): flexible elastomeric insulation see 2.2.11.2, distances: $S_8 \geq$ 100mm, $S_6 \geq$50mm (see 2.6)<br>Addtitional Protect Insulation (LI, 250mm): flexible elastomeric insulation see 2.2.11.2 or mineral wool see AP7 | | | | | | |
|---|---|---|---|---|---|---|---|
| Layers | Pipe diameter Ø<br>dc (mm) | Pipe wall thickness tc (mm) | Pipe insulation<br>Material: | Pipe insulation thickness (mm) | Addtitional Protect Insulation Material: | Addtitional Protect Insulation thickness (mm) | Classification |
| 1 | 16 | 2,2 | Elastomer, see 2.2.11.2 | 8,0 to 32,0 | none | 0 | **EI 120-U/C** |
| 1 | 20 | 2,8 | Elastomer, see 2.2.11.2 | 8,5 to 33,5 | none | 0 | **EI 120-U/C** |
| 1 | 25 | 2,7 | Elastomer, see 2.2.11.2 | 8,5 to 35,0 | none | 0 | **EI 120-U/C** |
| 1 | 32 | 3,2 | Elastomer, see 2.2.11.2 | 9,0 to 35,0 | none | 0 | **EI 120-U/C** |
| 1 | 40 | 3,5 | Elastomer, see 2.2.11.2 | 9,0 to 36,5 | none | 0 | **EI 120-U/C** |
| 2 | 50 | 4,0 | Elastomer, see 2.2.11.2 | 9,0 to 38,0 | none | 0 | **EI 60-U/C** |
| 2 | 63 | 4,5 | Elastomer, see 2.2.11.2 | 9,5 to 39,5 | none | 0 | **EI 60-U/C** |
| 2 | 63 | 4,5 | Elastomer, see 2.2.11.2 | 9,5 to 39,5 | Elastomer, see 2.2.11.2 | 19 | **EI 120-U/C** |
| 2 | 63 | 4,5 | Elastomer, see 2.2.11.2 | 9,5 to 39,5 | Mineral wool | 30 | **EI 120-U/C** |

| | Viega Sanfix Fosta and Raxofix pipes:<br>Material: PE-Xc/AL/PE-Xc, seal type iii) according 2.6.10.1<br>Approved pipe insulation material (CS): flexible elastomeric insulation see 2.2.11.2, distances: $S_8 \geq$ 100mm, $S_6 \geq$50mm (see 2.6) | | | | | | |
|---|---|---|---|---|---|---|---|
| Layers | Pipe diameter Ø<br>dc (mm) | Pipe wall thickness tc (mm) | Pipe insulation<br>Material: | Pipe insulation thickness (mm) | Addtitional Protect Insulation Material: | Addtitional Protect Insulation thickness (mm) | Classification |
| 0 | 16 | 2,2 | Mineral wool, see 2.1.4 | 20 to 40 | none | 0 | **EI 120-U/C** |
| 0 | 20 | 2,8 | Mineral wool, see 2.1.4 | 20 to 50 | none | 0 | **EI 120-U/C** |
| 0 | 25 | 2,7 | Mineral wool, see 2.1.4 | 20 to 60 | none | 0 | **EI 120-U/C** |
| 0 | 32 | 3,2 | Mineral wool, see 2.1.4 | 20 to 60 | none | 0 | **EI 120-U/C** |
| 0 | 40 | 3,5 | Mineral wool, see 2.1.4 | 20 to 60 | none | 0 | **EI 120-U/C** |
| 0 | 50 | 4,0 | Mineral wool, see 2.1.4 | 20 to 60 | none | 0 | **EI 120-U/C** |
| 0 | 63 | 4,5 | Mineral wool, see 2.1.4 | 20 to 60 | none | 0 | **EI 120-U/C** |

### 2.6.11.6 Geberit PushFit ML, penetrating CFS-CT, sealed with CFS-W P

| | Material: PE-HD/AL/PE-HD, seal type iii) according 2.6.10.1<br>Approved pipe insulation material (CS): flexible elastomeric insulation see 2.2.11.2, distances: $S_8 \geq$ 100mm, $S_6 \geq$50mm (see 2.2) | | | | | | |
|---|---|---|---|---|---|---|---|
| Layers | Pipe diameter Ø<br>dc (mm) | Pipe wall thickness tc (mm) | Pipe insulation<br>Material: | Pipe insulation thickness (mm) | Addtitional Protect Insulation Material: | Addtitional Protect Insulation thickness (mm) | Classification |
| 1 | 20 | 2,0 | Elastomer, see 2.2.11.2 | 8,5 to 33,5 | none | 0 | **EI 120-U/C** |
| 1 | 25 | 2,5 | Elastomer, see 2.2.11.2 | 8,5 to 35,0 | none | 0 | **EI 120-U/C** |
| 0 | 20 | 2,0 | Mineral wool, see 2.1.4 | 20 to 40 | none | 0 | **EI 120-U/C** |
| 0 | 25 | 2,5 | Mineral wool, see 2.1.4 | 20 to 60 | none | 0 | **EI 120-U/C** |
| | Approved pipe insulation material (LS, total length: $\geq$ 650mm): flexible PE isolation | | | | | | |
| 1 | 20 | 2,0 | PE-foam | 6 | none | 0 | **EI 120-U/C** |
| 1 | 25 | 2,5 | PE-foam | 6 | none | 0 | **EI 120-U/C** |

## 2.6.12 Metal pipes with elastomeric insulation, penetrating a CFS-CT double board seal, provided with Hilti firestop wrap CFS-W P and gap filler

### 2.6.12.1 Isolated copper pipes, penetrating CFS-CT, sealed with CFS-W P

| | Classification : **EI 90-C/U**<br>Material: copper, seal type iv) according 2.6.10.1<br>Approved pipe insulation material: see 2.2.11.2 | | | | | |
|---|---|---|---|---|---|---|
| Layers | Pipe diameter Ø dc (mm) | Pipe wall thickness tc (mm) | Pipe insulation thickness (mm) | Separation a2 (mm) | Separation a3 (mm) | Classification |
| 1 | 10 | 1,0 | 7,5 to 32,0 | 25 | 50 | **EI 90-C/U, E 120-C/U** |
| 2 | > 10 to 42 | 1,0 to 1,2 | 7,5/9,0 to 32,0/36,5 | 25 | 50 | |

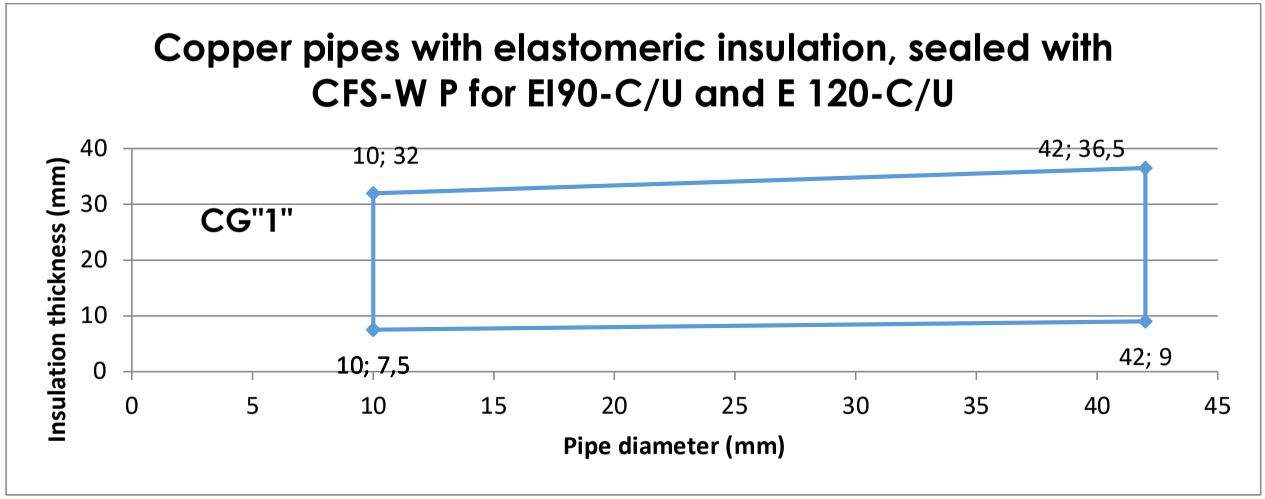

### 2.6.12.2 Isolated steel pipes, penetrating CFS-CT, sealed with CFS-W P

| | Classification : **EI 90-C/U**<br>Material: steel, seal type v) according 2.6.10.1<br>Approved pipe insulation material: see 2.2.11.2 | | | | | |
|---|---|---|---|---|---|---|
| Layers | Pipe diameter Ø dc (mm) | Pipe wall thickness tc (mm) | Pipe insulation thickness (mm) | Separation a2 (mm) | Separation a3 (mm) | Classification |
| 1 | 10 | 1,0 | 7,5 to 32,0 | 25 | 50 | **EI 90-C/U, E 120-C/U** |
| 2 | > 10<br>to 42<br>to 114 | 1,0<br>1,2<br>3,4 | 7,5/32,0 to<br>9,0/36,0 to<br>15,0/43,0 | 25 | 50 | |
| 3 | > 114 to 219 | 3,4 to 6,3 | 15,0/19,0 to 43,0/50,0 | 25 | 50 | |

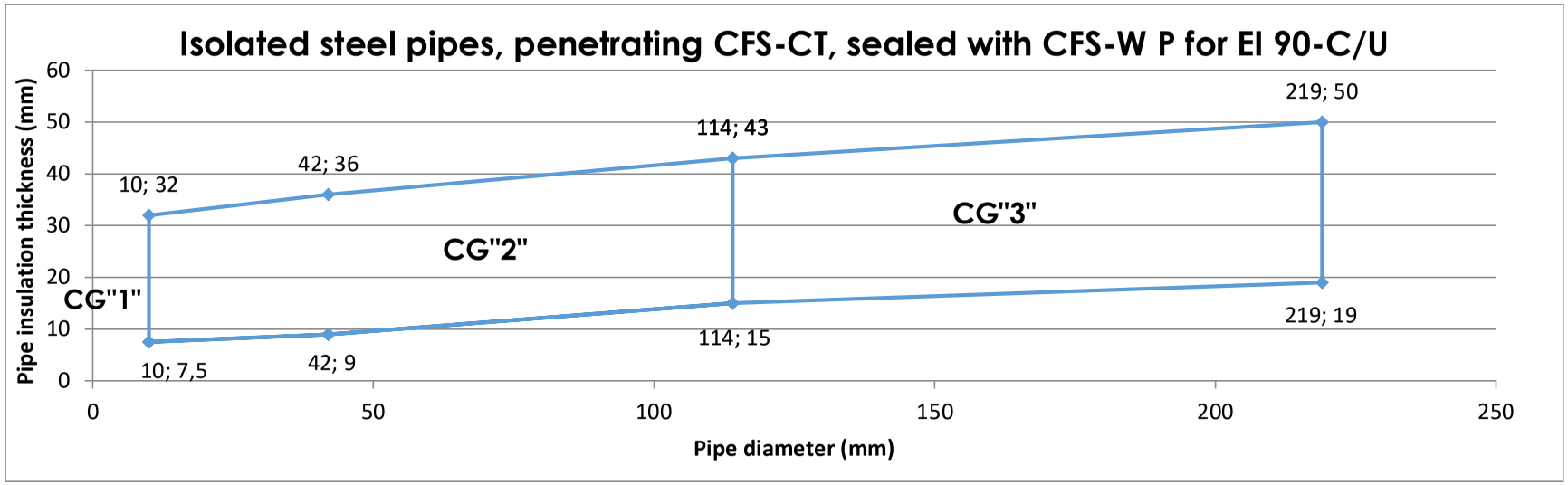

| Material: stainless steel, steel, iron; seal type v) according 2.6.10.1<br>Approved flexible, elastomeric pipe insulation ( CS) and additional pipe insulation (LI, 250mm) (AP8 – refer to 2.1.4): for material see 2.2.11.2<br>Pipe designation: Geberit Mapress , distances: $S_8 \geq$ 100mm, $S_6 \geq$50mm (see 2.6) | | | | | | | |
|---|---|---|---|---|---|---|---|
| Layers | Pipe diameter Ø<br>dc (mm) | Pipe wall thickness tc (mm) | Pipe Insulation<br>Type | Pipe insulation thickness (mm) | Additional Pipe Insulation<br>Type | Additional Pipe Insulation<br>Thickness (mm) | Classification |
| 2 | 66,7 | 1,5 | Elastomer see 2.2.11.2 | 17,5 to 40,0 | none | 0 | **EI 90-C/U** |
| 2 | 66,7 | 1,5 | Elastomer see 2.2.11.2 | 9,5 to 40,0 | Elastomer see 2.2.11.2 | 19 | **EI 120-C/U** |
| 2 | 66,7 | 1,5 | Elastomer see 2.2.11.2 | 9,5 to 40,0 | Mineral wool, see 2.1.4 | 30 | **EI 120-C/U** |
| 2 | 108 | 2,0 | Elastomer see 2.2.11.2 | 18,0 – 42,5 | none | 0 | **EI 30-C/U** |
| 2 | 108 | 2,0 | Elastomer see 2.2.11.2 | 18,0 – 42,5 | Elastomer see 2.2.11.2 | 19 | **EI 60-C/U** |
| 2 | 108 | 2,0 | Elastomer see 2.2.11.2 | 18,0 – 42,5 | Mineral wool, see 2.1.4 | 30 | **EI 120-C/U** |

## 2.6.13 Al-Composite pipes with foamed elastomeric insulation according to Table 4 and Hilti Firestop Collar CFS-C P

Construction details

(for symbols and abbreviations see Annex 4):

For specification of the foamed elastomeric insulation material to be used see table 4.

Hilti Firestop Collar CFS-C P ($A_3$) is installed on bottom side of the seal, fixed by threaded rods, washers and nuts as specified in Annex 1.2.

In some cases an additional protection is required:

$AP_9$: Mineral wool board according to Table installed around the pipe in the air gap between the two boards of the Hilti Firestop Double Board Seal.

Width around the pipe 100 mm, thickness 50 mm (height of the air gap).

Local insulation, sustained (LS)

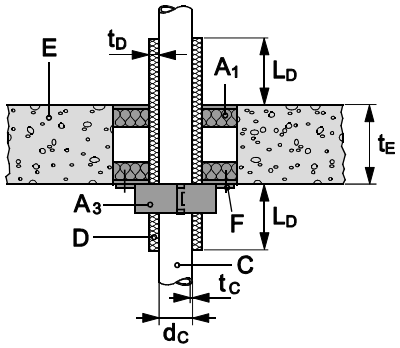


### 2.6.13.1 Pipes (C) with local insulation (D) – sustained – U/C

**PE-Xb/Al/PE-HD "Geberit Mepla",** Manufacturer: Geberit

| Pipe | | Insulation | | Collar size ($A_3$) | No. of hooks | Classification |
|---|---|---|---|---|---|---|
| diameter ($d_c$) [mm] | wall thickness ($t_c$) [mm] | thickness ($t_D$) [mm] | length ($L_D$) [mm] | | | |
| 40 | 3.5 | 9 | ≥ 250 | CFS-C P 63/2" | 2 | EI 90-U/C |
| 63 | 4.5 | 9 | ≥ 250 | CFS-C P 75/2.5" | 3 | EI 90-U/C |
| 75 | 4.7 | 9 | ≥ 250 | CFS-C P 90/3" | 3 | EI 90-U/C |

**PE-X/Al/PE "KELOX KM 110"**

Manufacturer: KeKelit Kunststoffwerk

| Pipe | | Insulation | | Collar size ($A_3$) | No. of hooks | Classification |
|---|---|---|---|---|---|---|
| diameter ($d_c$) [mm] | wall thickness ($t_c$) [mm] | thickness ($t_D$) [mm] | length ($L_D$) [mm] | | | |
| 40 | 4 | 9 | ≥ 250 | CFS-C P 50/1.5" | 2 | EI 90-U/C |
| 63 | 6 | 9 | ≥ 250 | CFS-C P 75/2.5" | 3 | EI 90-U/C |

| 2.6.13.2 Pipes (C) with continued insulation (D) – sustained – U/C | | | | | |
|---|---|---|---|---|---|
| **PE-Xb/Al/PE-HD "Geberit Mepla"**<br>Manufacturer: Geberit | | | | | |
| Pipe | | Insulation | Collar size ($A_3$) | No. of hooks | Classification |
| diameter ($d_c$) [mm] | wall thickness ($t_c$) [mm] | thickness ($t_D$) [mm] | | | |
| | | | | Additional protection | $AP_9$ |
| 16 | 2.3 | 8.0 (AF1) | CFS-C P 50/1.5" | 2 | EI 120-U/C |
| 16 | 2.3 | 32.0 (AF6) | CFS-C P 90/3" | 3 | EI 120-U/C |
| 32 | 3.0 | 9.0 (AF1) | CFS-C P 50/1.5" | 2 | EI 120-U/C |
| 32 | 3.0 | 35.0 (AF6) | CFS-C P 110/4" | 4 | EI 120-U/C |
| **PE-X/Al/PE "KELOX KM 110"**<br>Manufacturer: KeKelit Kunststoffwerk | | | | | |
| Pipe | | Insulation | Collar size ($A_3$) | No. of hooks | Classification |
| diameter ($d_c$) [mm] | wall thickness ($t_c$) [mm] | thickness ($t_D$) [mm] | | | |
| | | | | Additional protection | $AP_9$ |
| 16 | 2.0 | 8.0 (AF1) | CFS-C P 50/1.5" | 2 | EI 120-U/C |
| 16 | 2.0 | 32.0 (AF6) | CFS-C P 90/3" | 3 | EI 120-U/C |
| 32 | 3.0 | 9.0 (AF1) | CFS-C P 50/1.5" | 2 | EI 120-U/C |
| 32 | 3.0 | 35.0 (AF6) | CFS-C P 110/4" | 4 | EI 120-U/C |

## 2.6.14 Al-composite pipes and plastic pipes with mineral wool insulation according to Table 3

Construction details (for symbols and abbreviations see Annex 4):

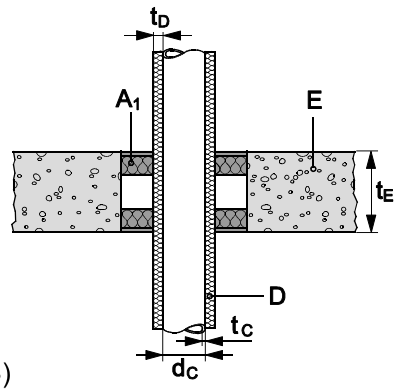


Continued insulation, sustained (CS)

### 2.6.14.1 Aluminum composit pipes (C) with continued insulation (D) – sustained – U/C

**PE-Xb/Al/PE-HD pipes „Geberit Mepla“**

Manufacturer: Geberit

| Pipe diameter ($d_C$) [mm] | Pipe wall thickness ($t_C$) [mm] | Insulation thickness ($t_D$) [mm] | Classification |
|---|---|---|---|
| 16 | 2.3 | ≥ 20 | EI 180-U/C |
| 32 | 3.0 | ≥ 20 | EI 180-U/C |
| 75 | 4.7 | ≥ 20 | EI 180-U/C |

**VPE/Al/VPE pipes „Kelox KM 110“**

Manufacturer: KeKelit

| Pipe diameter ($d_C$) [mm] | Pipe wall thickness ($t_C$) [mm] | Insulation thickness ($t_D$) [mm] | Classification |
|---|---|---|---|
| 16 | 2.0 | ≥ 20 | EI 180-U/C |
| 32 | 3.0 | ≥ 20 | EI 180-U/C |
| 75 | 7.5 | ≥ 20 | EI 180-U/C |

| 2.6.10.2 PE pipes (C) with continued insulation (D) – sustained – U/C | | | |
|---|---|---|---|
| **PE-Xa pipes "Rautitan flex "**<br>Manufacturer: Rehau | | | |
| Pipe diameter ($d_C$) [mm] | Pipe wall thickness ($t_C$) [mm] | Insulation thickness ($t_D$) [mm] | Classification |
| 16 | 2.2 | ≥ 20 | EI 180-U/C |
| 32 | 4.4 | ≥ 20 | EI 180-U/C |
| 63 | 8.6 | ≥ 20 | EI 180-U/C |

| 2.7 Rigid walls according to 2.1 f) minimum thickness 250 mm | |
|---|---|
| **Penetration seal:**<br>Two 50 mm Hilti Firestop Boards CFS-CT B 1S[12] ($A_1$) or mineral wool boards according to Table 1 coated with Hilti Firestop Coating CFS-CT ($A_1$), dry thickness of coating 0.7 mm on the outer side[13], all cut edges of boards sealed with Hilti Firestop Acrylic Sealant CFS-S ACR, remaining gaps around cables / cable supports (trays, ladders etc.) and other services filled with Hilti Firestop Acrylic Sealant CFS-S ACR.<br>The boards have to be positioned flush to the surface of the building element on each side of the wall.<br>Maximum distance for 1st service support: 250 mm.<br>Maximum seal size: 1200 x 1200 mm (width x height) for classification EI 120, 1200 x 2000 mm (width x height) for classification EI 90.<br>Minimum distances in mm (see illustration below): | $s_1$ = 0 (distance between cables/cable supports and seal edge<br>$s_2$ = 0 (distance between cable supports)<br>$s_3$ = 0 (distance between cables and upper seal edge)<br>$s_4$ = 0 (distance between cable supports and bottom seal edge)<br>$s_5$ = 50 (distance between cables and cable support above)<br>$s_6$ = 3 (distance between metal pipes and seal edge)<br>$s_7$ = 3 (distance between metal pipes and upper seal edge)<br>$s_8$ = 0 (distance between metal pipes)<br>$s_9$ = 17 (distance between plastic pipes/pipe closure devices and seal edge)<br>$s_{10}$ = 17 (distance between plastic pipes/pipe closure devices and upper seal edge)<br>$s_{11}$ = 0 (distance between plastic pipes/pipe closure devices)<br>$s_{12}$ = 30 (distance between metal pipes and plastic pipes/pipe closure devices)<br>$s_{13}$ = 3 (distance between cables/cable supports and metal pipes)<br>$s_{14}$ = 40 (distance between cables/cable supports and plastic pipes/pipe closure devices) |

12 Hilti Firestop Boards CFS-CT B 2S (coated on both faces) may also be used

13 The board may also be coated on both faces

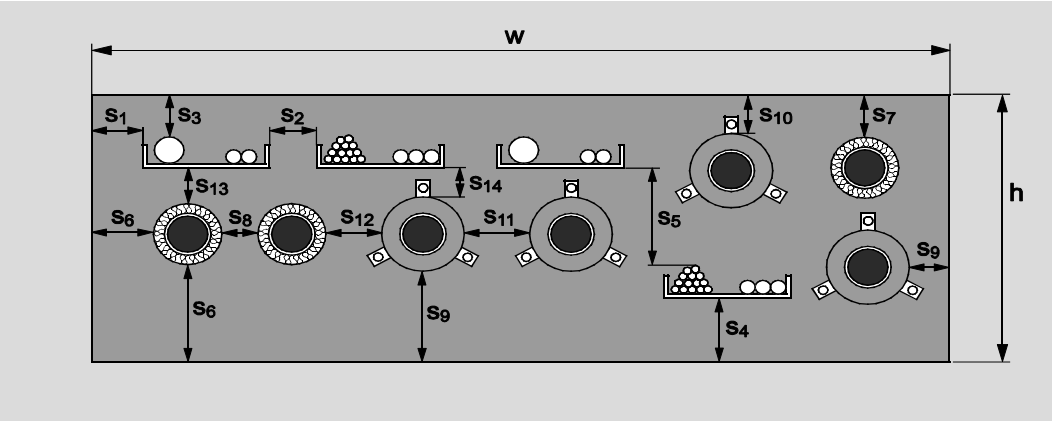


**Penetrating services :(single, multiple or mixed)**

| 2.7.1 **Blank seal (no services) *** | |
|---|---|
| Construction details (for symbols and abbreviations see Annex 4): | Classification |
| 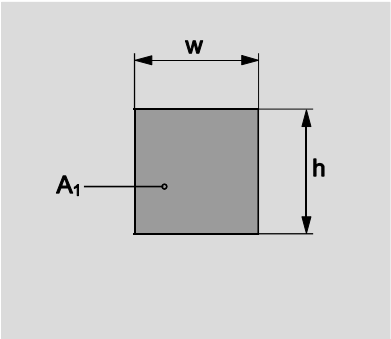  * If services are added later on in a blank seal only the services listed in the tables below may be added that fulfil the required classification | |
| Maximum size 1200 x 2000 mm² (width **w** x height **h**) | EI 90 |
| Maximum size 4000mm x 800 mm (width **w** x height **h**) rigid wall only, $t_E \geq$ 250mm,density $\geq$ 500kg/m³ | EI 90 / E90 |

# 3 ANNEX 3 Reference Documents

## 3.1 References to standards mentioned in the ETA:

| | |
|---|---|
| DIN 8061 | Unplasticized polyvinyl chloride (PVC-U) pipes - General quality requirements and testing |
| DIN 8062 | Unplasticized polyvinyl chloride (PVC-U) pipes - Dimensions |
| DIN 8074 | Polyethylene (PE) - Pipes PE 63, PE 80, PE 100, PE-HD - Dimensions |
| DIN 8075 | Polyethylene (PE) pipes - PE 63, PE 80, PE 100, PE-HD - General quality requirements, testing |
| DIN 8077 | Polypropylene (PP) pipes - PP-H, PP-B, PP-R, PP-RCT - Dimensions |
| DIN 8078 | Polypropylene (PP) pipes - PP-H, PP-B, PP-R, PP-RCT - General quality requirements and testing |
| DIN 19531-10 | Pipes and fittings made of unplasticized polyvinyl chloride (PVC-U) socket for waste and soil discharge systems inside buildings - Part 10: Fire behavior, quality control and installation recommendations |
| DIN 19535-10 | High-density polyethylene (PE-HD) pipes and fittings for hot-water resistant waste and soil discharge systems (HT) inside buildings - Part 10: Fire behavior, quality control and installation recommendations |
| EN 1026 | Windows and doors – Air permeability – Test method |
| EN 1329-1 | Plastics piping systems for soil and waste discharge (low and high temperature) within the building structure - Unplasticized poly(vinyl chloride) (PVC-U) - Part 1: Specifications for pipes, fittings and the system |
| EN 1366-3 | Fire resistance tests for service installations - Part 3: Penetration seals |
| EN 1453-1 | Plastics piping systems with structured-wall pipes for soil and waste discharge (low and high temperature) inside buildings - Unplasticized poly(vinyl chloride) (PVC-U) - Part 1: Specifications for pipes and the system |
| EN 1519 | Plastics piping systems for soil and waste discharge (low and high temperature) within the building structure - Polyethylene (PE) |
| EN 1566-1 | Plastics piping systems for soil and waste discharge (low and high temperature) within the building structure - Chlorinated poly(vinyl chloride) (PVC-C) - Part 1: Specifications for pipes, fittings and the system |
| EN 12201-2 | Plastics piping systems for water supply, and for drainage and sewerage under pressure - Polyethylene (PE) - Part 2: Pipes |
| EN 12666-1 | Plastics piping systems for non-pressure underground drainage and sewerage - Polyethylene (PE) - Part 1: Specifications for pipes, fittings and the system |
| EN 12667 | Thermal performance of building materials and products – Determination of thermal resistance by means of guarded hot plate and heat flow meter methods – Products of high and medium thermal resistance |

| | |
|---|---|
| EN 13501-1 | Fire classification of construction products and building elements – Part 1: Classification using test data from reaction to fire tests |
| EN 13501-2 | Fire classification of construction products and building elements – Part 2: Classification using test data from fire resistance tests |
| EN 14303 | Thermal insulation products for building equipment and industrial installations - Factory made mineral wool (MW) products – Specification |
| EN 14304 | Thermal insulation products for building equipment and industrial installations - Factory made flexible elastomeric foam (FEF) products - Specification |
| EN ISO 140-3 | Acoustics – Measurement of sound insulation in buildings and of building elements – Part 3: Laboratory measurements of airborne sound insulation of building elements |
| EN ISO 140-10 | Acoustics – Measurements of sound insulation in buildings and of building elements – Part 10: Laboratory measurement of airborne sound insulation of small building elements |
| EN ISO 717-1 | Acoustics – Rating of sound insulation of buildings and of building elements – Part 1: Airborne sound insulation |
| EN ISO 1452-2 | Plastics piping systems for water supply and for buried and above-ground drainage and sewerage under pressure - Unplasticized poly (vinyl chloride) (PVC-U) - Part 2: Pipes |
| EN ISO 1519 | Paints and varnishes – Bend test (cylindrical mandrel) |
| EN ISO 4032 | Hexagon nuts, style 1 - Product grades A and B |
| EN ISO 7089 | Plain washers - Normal series - Product grade A |
| EN ISO 15493 | Plastics piping systems for industrial applications - Acrylonitrile-butadiene-styrene (ABS), unplasticized poly(vinyl chloride) (PVC-U) and chlorinated poly(vinyl chloride) (PVC-C) - Specifications for components and the system; Metric series |
| EN ISO 15494 | Plastics piping systems for industrial applications - Polybuten (PB), polyethylene (PE) and polypropylene (PP) - Specifications for components and the system; Metric series |
| EN ISO 15874 | Plastics piping systems for hot and cold water installations - Polypropylene (PP) |
| EN ISO 15875 | Plastics piping systems for hot and cold water installations - Cross-linked polyethylene (PE-X) |

## 3.2 Other referenced documents

| | |
|---|---|
| EOTA TR 001 | Determination of impact resistance of panels and panel assemblies |
| EOTA TR 024 | Characterization, Aspects of Durability and Factory Production Control for Reactive Materials, Components and Products |

# 4 ANNEX 4 Abbreviations used in drawings

| Abbreviation | Description |
|---|---|
| $A_1$ | Mineral wool board coated with Hilti Firestop Coating CFS-CT or Hilti Firestop Coated Board CFS-CT B 1S / CFS-CT B 2S |
| $A_2$ | Hilti Firestop Bandage CFS-B |
| $A_3$ | Hilti Firestop Collar CFS-C or CFS-C P |
| $A_4$ | Hilti Firestop Wrap CFS-W or CFS-W P |
| $A_5$ | Hilti Firestop Sleeve CFS-SL M |
| $A_6$ | Hilti Firestop Acrylic Sealant CFS-S ACR as gap filler |
| $AP_1$ to $AP_{12}$ | Additional protection for services |
| C, $C_1$, $C_2$, $C_3$ | Penetrating services |
| D | Pipe insulation |
| $d_c$ | Pipe diameter |
| E, $E_1$, $E_2$ | Building element (wall, floor) |
| F | Fixing of pipe closure device |
| G | Additional supporting construction for blank seal with floor application |
| h | Height of the penetration seal |
| l | Length of the penetration seal |
| $L_{AP}$ | Length of the additional protection |
| $L_D$ | Length of the pipe insulation |
| $s_1$, $s_2$, $a_1$,$a_2$,$a_3$ | Distances |
| $t_{AP}$ | Thickness of additional protection |
| $t_c$ | Pipe wall thickness |
| $t_D$ | Thickness of pipe insulation |
| $t_E$ | Thickness of the building element |
| w | Width of the penetration seal |