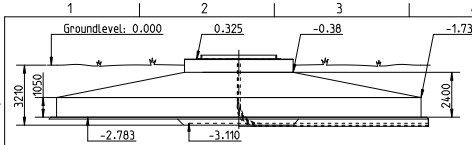

Foundation side view:

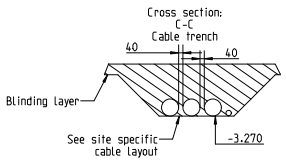

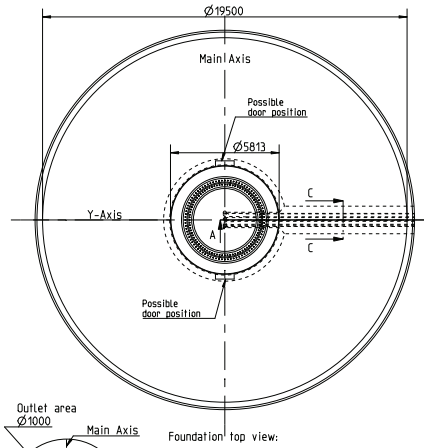

Foundation top view:

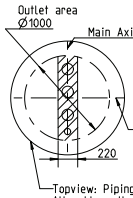

Topview: Piping detail at the pedestal
All cable outlets must be aligned with the Main Axis within the outlet area

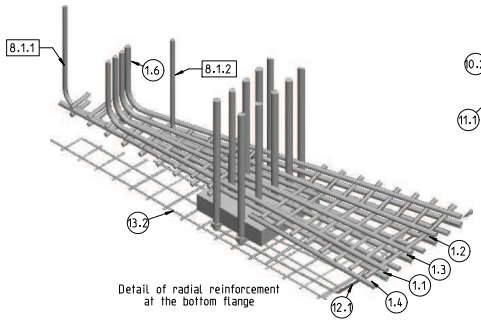

Detail of radial reinforcement at the bottom flange

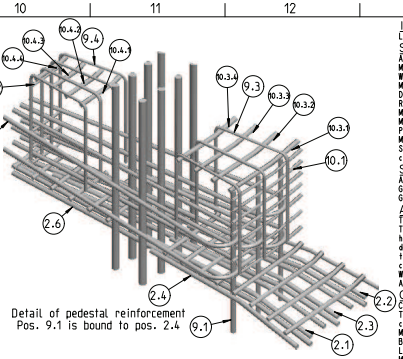

Detail of pedestal reinforcement
Pos. 9.1 is bound to pos. 2.4

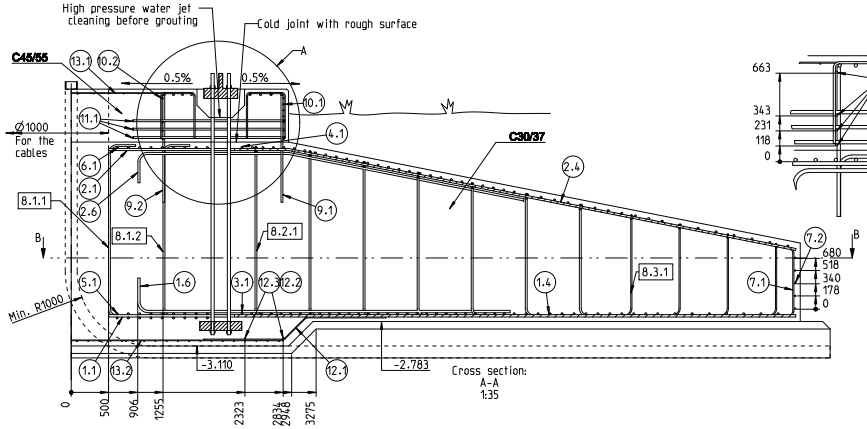

Cross section:
A-A
1:35

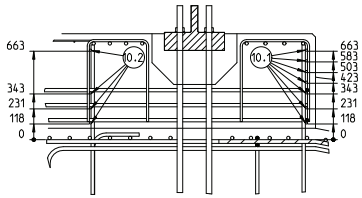

Detail A

Topview: Piping detail at the pedestal
All cable outlets must be aligned with the Main Axis within the outlet area

Reinforcement bottom:
Pos. 1.1 to 1.5, 3 and 5.
1:75

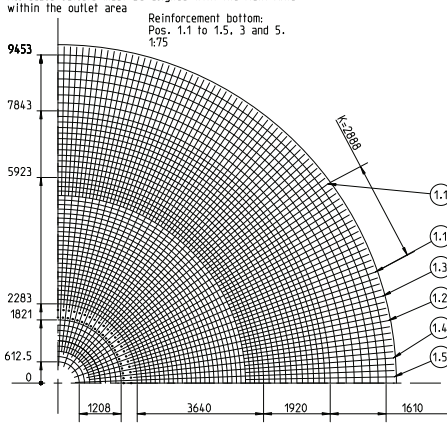

Pos. 5.1-5.9
2x9 pcs.
Ø25-151mm

Pos. 3.1-3.29
29 pcs.
Ø25-130mm

Pos. 3.30-3.41
12 pcs.
Ø25-160mm

Pos. 3.42-3.48
7 pcs.
Ø25-230mm

Reinforcement top:
Pos. 2.1 to 2.5, 4 and 6.
1:75

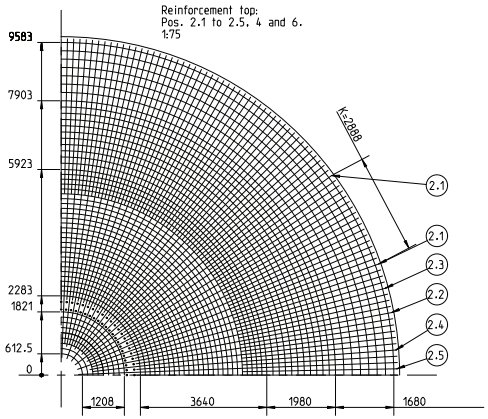

Pos. 6.1-6.9
9 pcs.
Ø25-151mm

Pos. 4.1-4.27
27 pcs.
Ø25-140mm

Pos. 4.28-4.38
11 pcs.
Ø25-180mm

Pos. 4.39-4.45
7 pcs.
Ø25-240mm

Cross section:
B-B
Pos. 7 and 8.
1:75

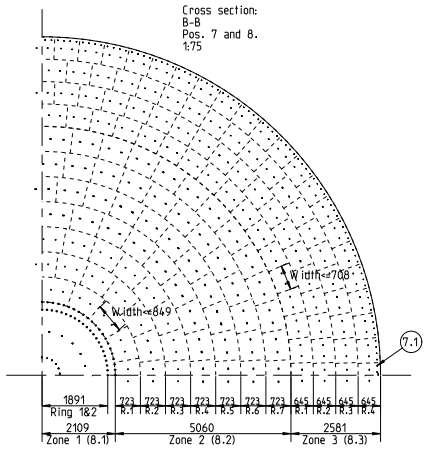

Before tower installation:

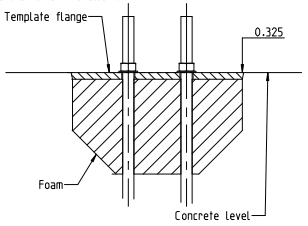

After tower installation:

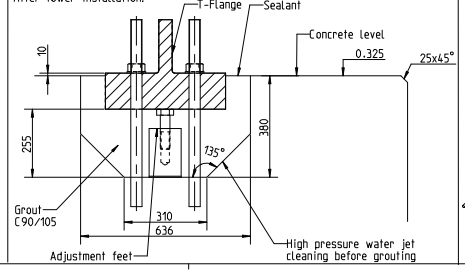

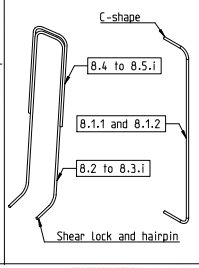

Number and height of C-shaped bars, shear locks and hair pins
(see also Cut and Bending list)

	Zone 1 C-shape Ø25			Zone 2 Ø25						Zone 3 Ø16				
	Number	Pos.	C-shape Height	Number	i	Shear locks Height Pos. 8.2.i	i	Hairpins Height Pos. 8.4.i		Number	i	Shear locks Height Pos. 8.3.i	i	Hairpins Height Pos. 8.5.i
Ring 1	21	8.1.1	2305	18	1	2220	1	1213		66	1	1307	1	656
Ring 2	21	8.1.2	2305	24	2	2163	2	1213		72	2	1179	2	656
Ring 3	-	-		29	3	2021	3	1213		78	3	1052	3	656
Ring 4	-	-		34	4	1878	4	1213		84	4	925	4	656
Ring 5	-	-		40	5	1736	5	1213		0	-	-	-	-
Ring 6	-	-		45	6	1593	6	1213		0	-	-	-	-
Ring 7	-	-		50	7	1450	7	1213		0	-	-	-	-
Ring 8	-	-		0	-	-	-	-		0	-	-	-	-
Ring 9	-	-		0	-	-	-	-		0	-	-	-	-
Ring 10	-	-		0	-	-	-	-		0	-	-	-	-

Information for design approver:

Loads: 0037-8985.V01, calculation: 0041-0087.V01

Soil condition to be fulfilled:

Assumed characteristic soil parameters: friction angle 30° or undrained shear strength 60 KN/m².
Min. density of soil 18 / 8 KN/m³, density of back filling 16.2 / 6.2 KN/m³ to 20.7 / 10.7 KN/m³.
Weight of backfilling is included in stability and shall not be removed.
Max. ground water level: 2.783 m under terrain
Drainage must be performed according to local condition and soil composition.
Required rotational stiffness: min. 97 GNm/rad (>= 28 GNm/rad according to load report 0037-8985.V01)
Max. allowable tilting of the foundation due to permanent settlements: 3 mm/m
Max. plastic design soil pressure: 218 KN/m², constant over substitute area, with a
PSF of 1.35 on wind, 0.9 on tower weight and backfilling, 1.0 on foundation weight
Max. elastic soil pressure 247 KN/m² with PSF equal to 1.0 for all loads.
Soil investigations at the site shall be in accordance with EN 1997-1:2004, section 2-4, and must show compliance with the design assumption.

Specifications:

All works carried out acc. to EN 1992-1-1/AC:2010 Design of Concrete Structures, EN 1997-1/AC:2009* Geotechnical Design, general rules, EN 1997-2/AC:2010 Geotechnical Design, investigation and testing.
General description: 0005-8491. Design life time: 20 years.

Anchor cage, approval drawing 0041-0093.V01:

The anchor cage incl. adjustment feet is provided by Vestas as loose parts or assembled.
The anchor cage shall be set upon the blinding layer and adjusted to the correct position vertically and horizontally by using the adjustment feet at the lower flange. During casting, which must be done simultaneously inside and outside the cage, great care must be taken to ensure that the cage does not displace and that the lower flange is in full contact with compacted concrete, below and above flange. Max. vertical deviation after concreting +/- 4 mm.
Weight of anchor cage, app. 16300 kg total.
Anchors shall be post tensioned according to approval drawing 0041-0093.V01

Concrete:

Concrete works acc. to EN 13670:2009 "Execution of concrete structures".
The concrete must be composed, mixed and prepared according to EN 206-1 in the strength class: C30/37 for plate, C45/55 for pedestal. Exposure class: XC4 / XD1 / XS1 / XF3 / XA1
Maximum aggregate size in the area of the bottom and top reinforcement: 16mm (in other areas max. 32mm)
Blinding layer min. 100 mm.
Low-creeping and low-shrink concrete for exterior buildings units, low heat of hydration
Min. required density of concrete due to stability: 2198 kg/m3.
Covering: Cnom = 60 mm against form work or blinding layer, Cnom = 110 mm against soil (no formwork).
Concrete quality control according to EN 206-1.

Reinforcement:

Steel bars S500 ductility class B or C according to EN 10080 with min Fyk = 500 N/mm².

Grout:

Non-shrink grout, min. compression strength C90/105
Min. compression strength at time of post tension 55 N/mm² and after 1 day: 10 N/mm².
Post tension force: 605 KN equal to 543 of Fuk for the Gr 10.9 anchors and an elongation of 7.1 to 8.2 mm.

Cable conduits (PVC tubes) - NOT a Vestas delivery:

See general discription in "Switchgear installation vs foundation tubes" 0017-5653.
See site specific cable layout for actual number and size of conduits.

Earthing:

See "Vestas Earthing System", esp. description 0019-2575 "Earthing on anchor cage foundation"
incl. copper conductors, bolts, nuts and washers delivered with the anchor cage.

Reinforcement Cut and Bending List: 0041-0089.V01

Radial bars, bottom part:

1.1 21 pcs. Ø32 x 9190 mm, through anchors.
1.2 21 pcs. Ø32 x 8848 mm, through anchors.
1.3 42 pcs. Ø32 x 8433 mm, through anchors.
1.4 84 pcs. Ø32 x 7507 mm, outside anchors.
1.5 168 pcs. Ø16 x 4280 mm, outside anchors.
1.6 84 pcs. Ø32 x 5344 mm, above 1.1-1.3.

Radial bars, top part:

2.1 21 pcs. Ø28 x 9321 mm, through anchors.
2.2 21 pcs. Ø28 x 8978 mm, through anchors.
2.3 42 pcs. Ø28 x 8564 mm, through anchors.
2.4 84 pcs. Ø28 x 7638 mm, outside anchors.
2.5 168 pcs. Ø16 x 4542 mm, outside anchors.
2.6 84 pcs. Ø28 x 5541 mm, below 2.1-2.3.

Concentric bars outside anchors, bottom part:

3.1 ø25 ring Ø4566, 3 pcs. L=5826 mm, outer ring no. 1.
3.48 ø25 ring Ø18906, 6 pcs. L=10944 mm, outer ring no. 48.
See table in Cut & Bending List.

Concentric bars outside anchors, top part:

4.1 ø25 ring Ø4566, 3 pcs. L=6220 mm, outer ring no. 1.
4.45 ø25 ring Ø19166, 6 pcs. L=11474 mm, outer ring no. 45.
See table in Cut & Bending List.

Concentric bars inside anchors, bottom part, 1 layer below and 1 layer above pos 1:

5.1 ø25 ring Ø1225, 2 x 1 = 2 pcs. L=4837 mm, ring no. 1.
5.9 ø25 ring Ø3641, 2 x 2 = 4 pcs. L=6707 mm, ring no. 9.
5.i ø25 ring Ø923 + 302 * i, i = 1-9, ring no. i. Total number of rings: 18. See Cut & Bending list.

Concentric bars inside anchors, top part, 1 layer above pos 2:

6.1 ø25 ring Ø1225, 1 x 1 = 1 pcs. L=5260 mm, ring no. 1.
6.9 ø25 ring Ø3641, 1 x 3 = 3 pcs. L=5225 mm, ring no. 9.
6.i ø25 ring Ø923 + 302 * i, i = 1-9, ring no. i. Total number of rings: 9. See Cut & Bending list.

Vertical bars and horizontal rings at outer edge

7.1 336 pcs ø25 x 1495 mm, vertical bars at outer edge.
7.2 5 rings ø16 x Ø19364, 5 x 6 = 30 pcs L=10699 mm, horizontal rings at outer edge (at pos. 7.1).

Shear locks and hair pins - see Cut and Bending list for correct lengths

8.1 42 pcs ø25 x 2894 mm, shear locks inside anchor cage (zone 1) - C-shaped.
8.2 240 pcs ø25 x approx. 4560 mm (mean value), shear locks in punching zone (zone 2).
8.3 300 pcs ø16 x approx. 2841 mm (mean value), shear locks in shear zone (zone 3).
8.4 240 pcs ø25 x approx. 2515 mm (mean value), hair pins for all zone 2.
8.5 300 pcs ø16 x approx. 1600 mm (mean value), hair pins for zone 3.

Vertical bars and bows in pedestal

9.1 84 pcs ø25 x 1428 mm, vertical bar outside anchors.
9.2 21 pcs ø25 x 1428 mm, vertical bar inside anchors.
9.3 84 pcs ø16 x 1681 mm, outer bows, see Cut & Bending list.
9.4 84 pcs ø16 x 1622 mm, inner bows, see Cut & Bending list.

Horizontal rings in pedestal

10.1 7 rings ø16 x Ø5677, 7 x 3 = 21 pcs L=6746 mm, at outer vertical bars pos 9.1.
10.2 4 rings ø16 x Ø2442, 4 x 2 = 8 pcs L=4636 mm, at inner vertical bars pos 9.2.
10.3.1 1 ring ø25 x Ø5629, 1 x 3 = 3 pcs L=7306 mm, ring 1 under bow pos 9.3.
10.3.2 1 ring ø25 x Ø5347, 1 x 3 = 3 pcs L=7011 mm, ring 2 under bow pos 9.3.
10.3.3 1 ring ø25 x Ø5064, 1 x 3 = 3 pcs L=6715 mm, ring 3 under bow pos 9.3.
10.3.4 1 ring ø25 x Ø4782, 1 x 3 = 3 pcs L=6419 mm, ring 4 under bow pos 9.3.
10.4.1 1 ring ø25 x Ø3218, 1 x 2 = 2 pcs L=6467 mm, ring 1 under bow pos 9.4.
10.4.2 1 ring ø25 x Ø2975, 1 x 2 = 2 pcs L=6085 mm, ring 2 under bow pos 9.4.
10.4.3 1 ring ø25 x Ø2733, 1 x 2 = 2 pcs L=5704 mm, ring 3 under bow pos 9.4.
10.4.4 1 ring ø25 x Ø2490, 1 x 2 = 2 pcs L=5323 mm, ring 4 under bow pos 9.4.

Hooks under grout trench (splitting bars)

11.1 126 pcs ø25 x 3889 mm, bended 184.2 deg., see Cut & Bending list.

Z-Bars under the anchor flange

12.1 84 pcs ø12 x 2553 mm, under base flange, see Cut & Bending list for detailed geometry.
12.2 1 ring ø12 x Ø5668, 1 x 3 = 3 pcs. L=6356mm, ring placed on Z-bows pos. 12.1.
12.3 1 ring ø12 x Ø4646, 1 x 3 = 3 pcs. L=5286mm, ring placed on Z-bows pos. 12.1.

Shrinkage mesh, cut to match cable conduits and adjustment feet

13.1 ø2483 mm top reinforcement mesh ø10 / 150 mm or equivalent with min. 524 mm²/m
13.2 ø5668 mm bottom reinforcement mesh ø10 / 150 mm or equivalent with min 524 mm²/m

Tolerances:

All non specified tolerances: +/- 10 mm

Remarks:

Dimensions in mm. Reinforcement shall be tied with steel wire per 500 mm minimum, no welding permitted.
The anchor cage is rotated to place the door in the right direction.
Basic anchorage length for C30/37: Lb = 35.74 x Ø for good conditions.
Basic anchorage length for C30/37: Lb = 51.06 x Ø for other conditions.
Lap length: Ls = 1.4 x Lb. Bending diameters: 7 x Ø for Ø >= 20 mm, 4 x Ø for Ø < 20 mm.
All overlap of bars shall be staggered.

Bending- and overlap lengths, bending diameters:

Size	Anchor	Overlap	Bending Ø	Remark
Ø32	1012	1416	n.a.	Bottom radial bar (pos 1)
Ø28	1195	1673	680	Top radial bar (pos 2)
Ø25	746	1045	175	Bottom concentric ring outside anchors (pos 3)
Ø25	1028	1439	175	Top concentric ring outside anchors (pos 4)
Ø25	706	988	175	Bottom concentric ring inside anchors (pos 5)
Ø25	1008	1412	175	Top concentric ring inside anchors (pos 6)
Ø16	572	801	64	Concentric ring in pedestal (pos 10)
Ø16	400	560	64	Rings at foundation edge (pos 7.2)

Blinding layer 33 m3, concrete 527 m3, grout 2 m3, reinforcement 55 t, reinforcement ratio 105 kg/m3

Voorbeeld fundatie ontwerp

VESTAS PROPRIETARY NOTICE: This document contains valuable confidential information and is not to be disclosed to a third party. It is protected by copyright laws or unpublished work. Vestas reserves all patent, copyright, trade secret, and other proprietary rights in it. The information in this document may not be used, reproduced, or disclosed except if and to the extent rights are expressly granted by Vestas in writing and subject to applicable conditions. Vestas disclaims all warranties except as expressly granted by written agreement and not responsible for unauthorized uses, for which it may pursue legal remedies against responsible parties.