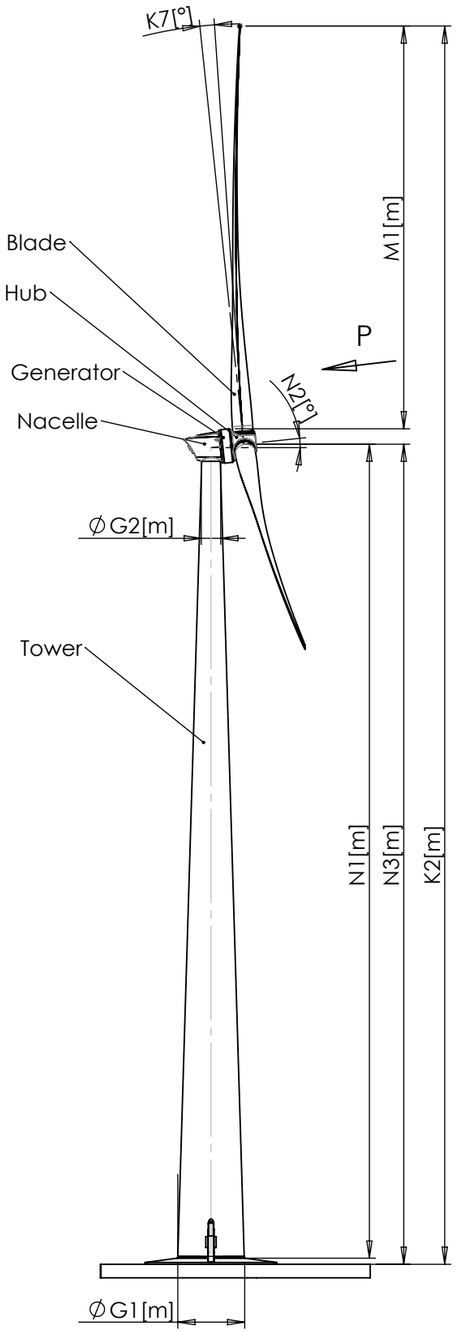

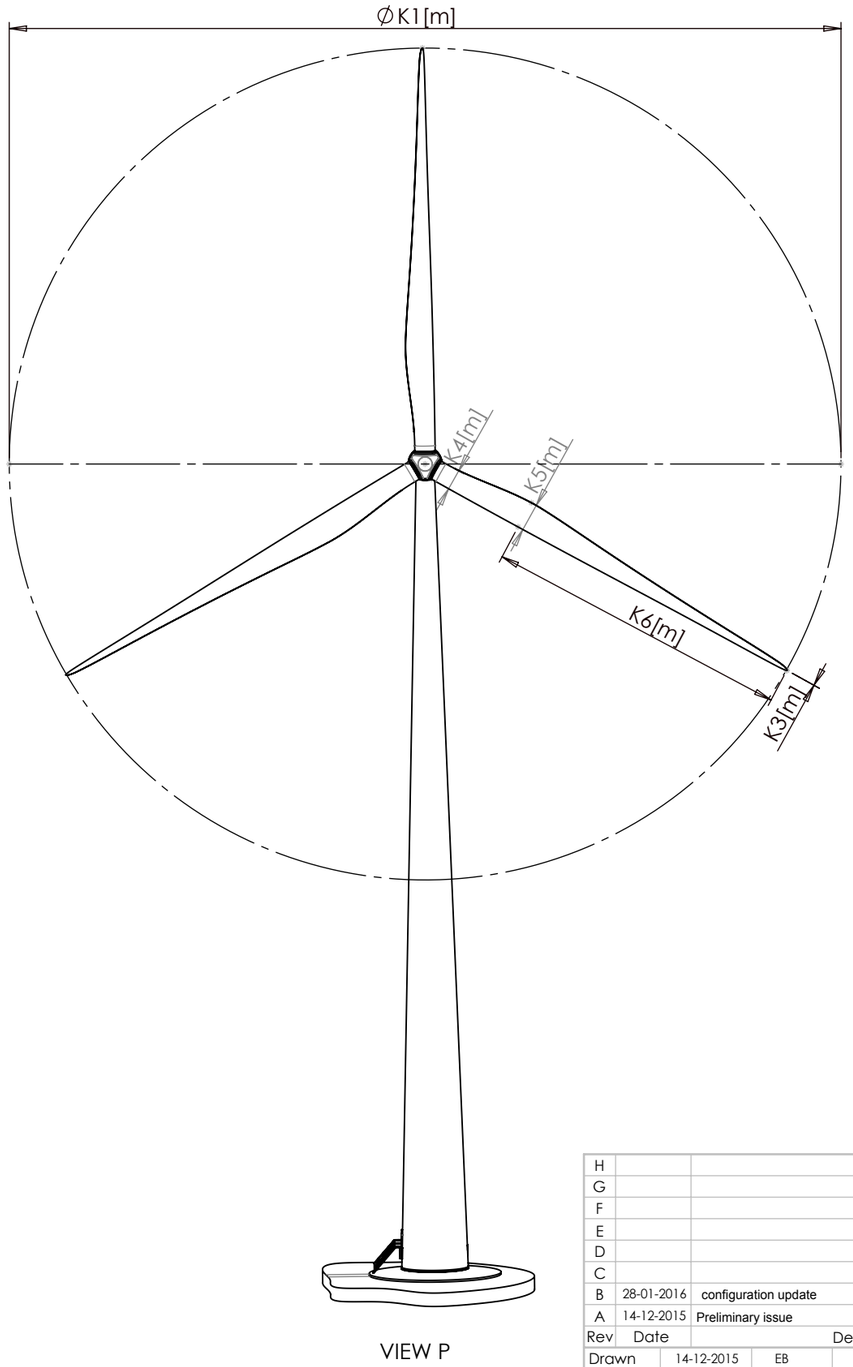

Item	Symbol	Value
Tower bottom diameter	G1	11
Tower top diameter	G2	3.2
Rotor diameter	K1	136
Total height	K2	200
Blade tip width	K3	0.2
Blade root width	K4	3.2
Max blade width	K5	4.5
Distance tip - widest	K6	50
Cone angle	K7	2
Hub height	N1	132
Slope angle hub axis	N2	6
Hub height above ground level	N3	133
Height above generator	M1	65.5

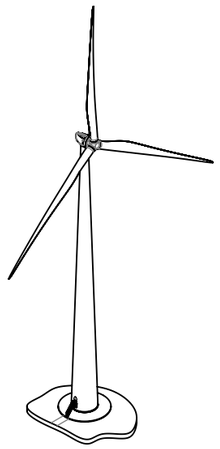

Rev	Date	Description	Init.
H			
G			
F			
E			
D			
C			
B	28-01-2016	configuration update	EB
A	14-12-2015	Preliminary issue	EB

Drawn	14-12-2015	EB		Surface roughness ISO 4287
Check		-		ISO limits and fits NEN-ISO 286-2
Approve	Date	Initials	Sign	Welding symbolic ISO 2553

Lagerwey

© Copyright Lagerwey Wind BV

Surf.treatment: -

Material: -

NEN-ISO 1101

Gen. Tol. NEN-ISO 2768-c

ISO 1302

American proj.

units mm

size A3

Module: Turbine

Description: L136 4.0MW - Hub height 132m MST

Drawing no.: 20-000136

Rev. B

Document class no. M00-C7

Weight: - kg

Scale: 1:1000

Sheets: 1 of 3

This document is confidential. It contains confidential, proprietary and privileged information and unauthorised disclosure, reproduction or use is prohibited. It is subject to change without notice.