principedetail overstek

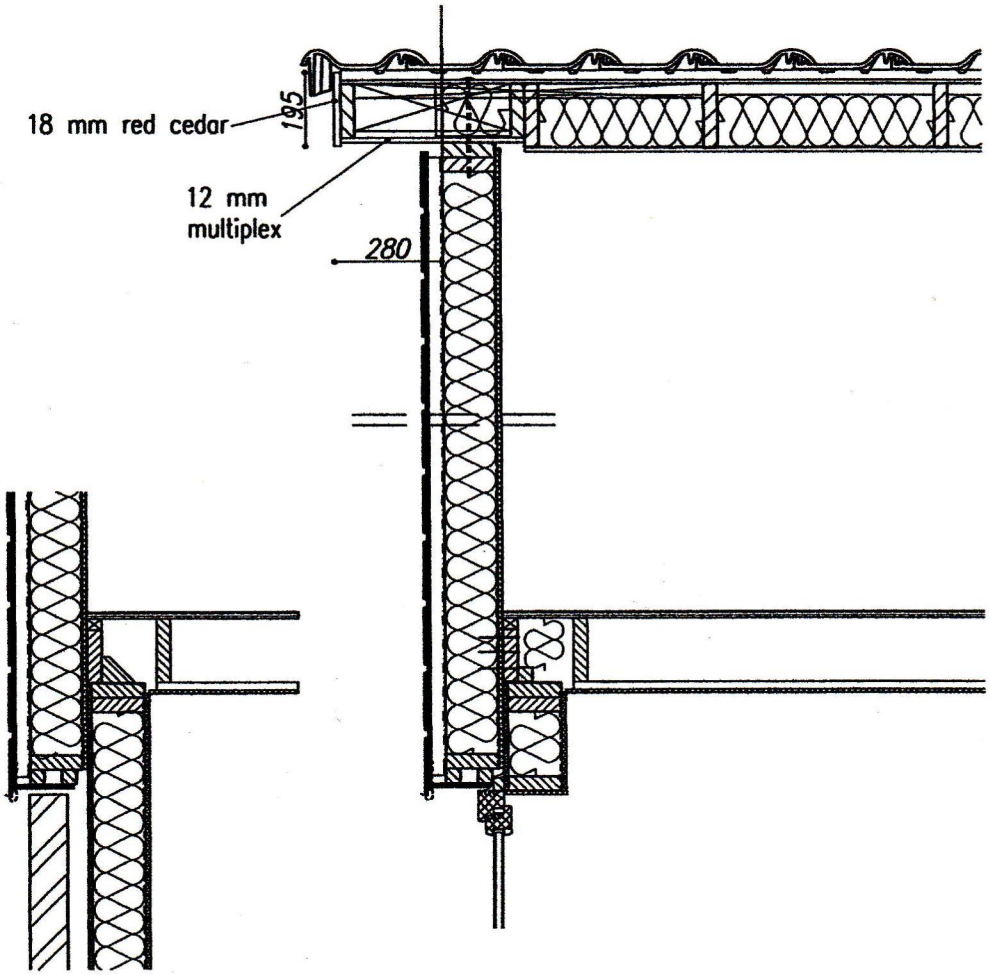

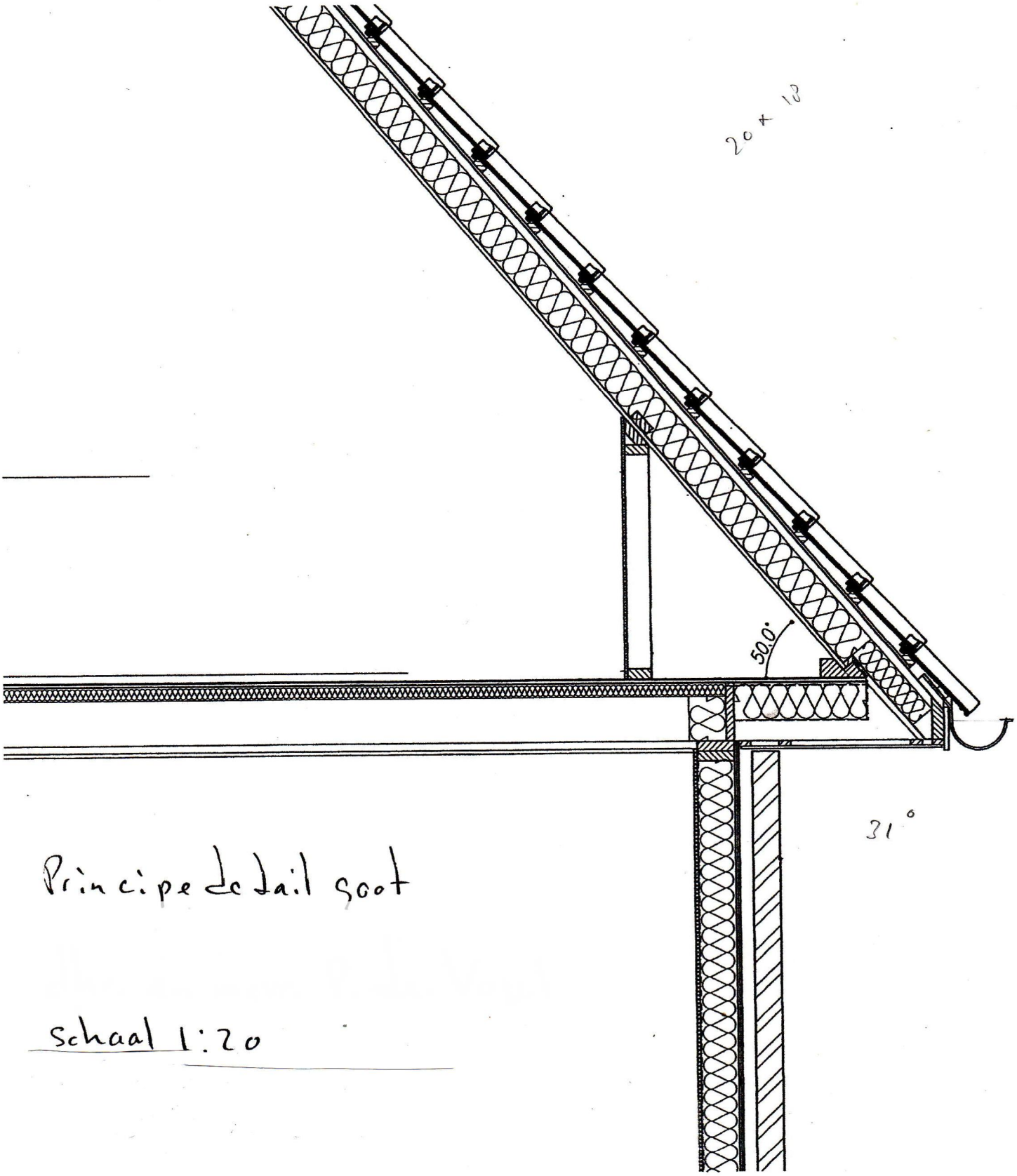

Principe detail goot

schaal 1:20
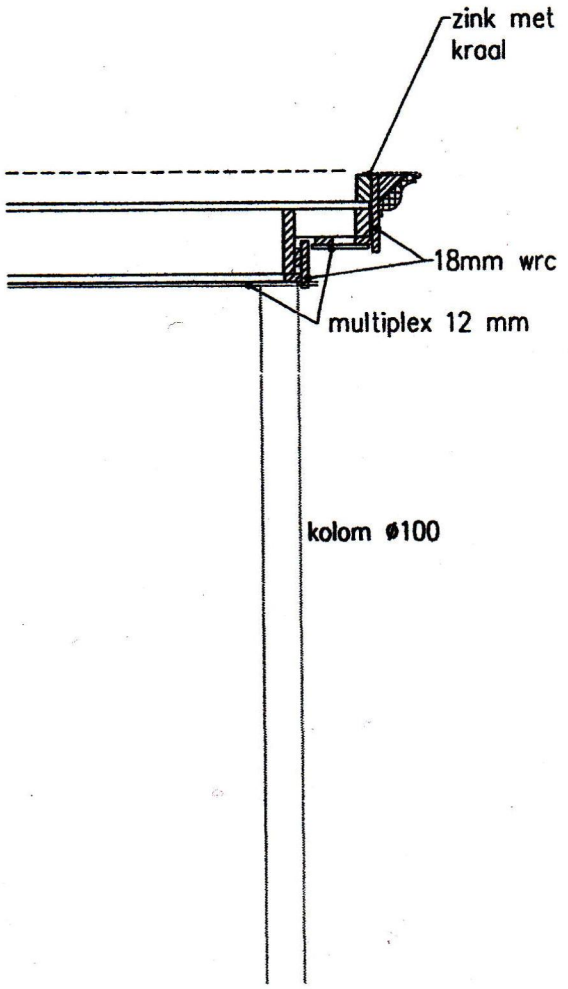
principedetail luifel