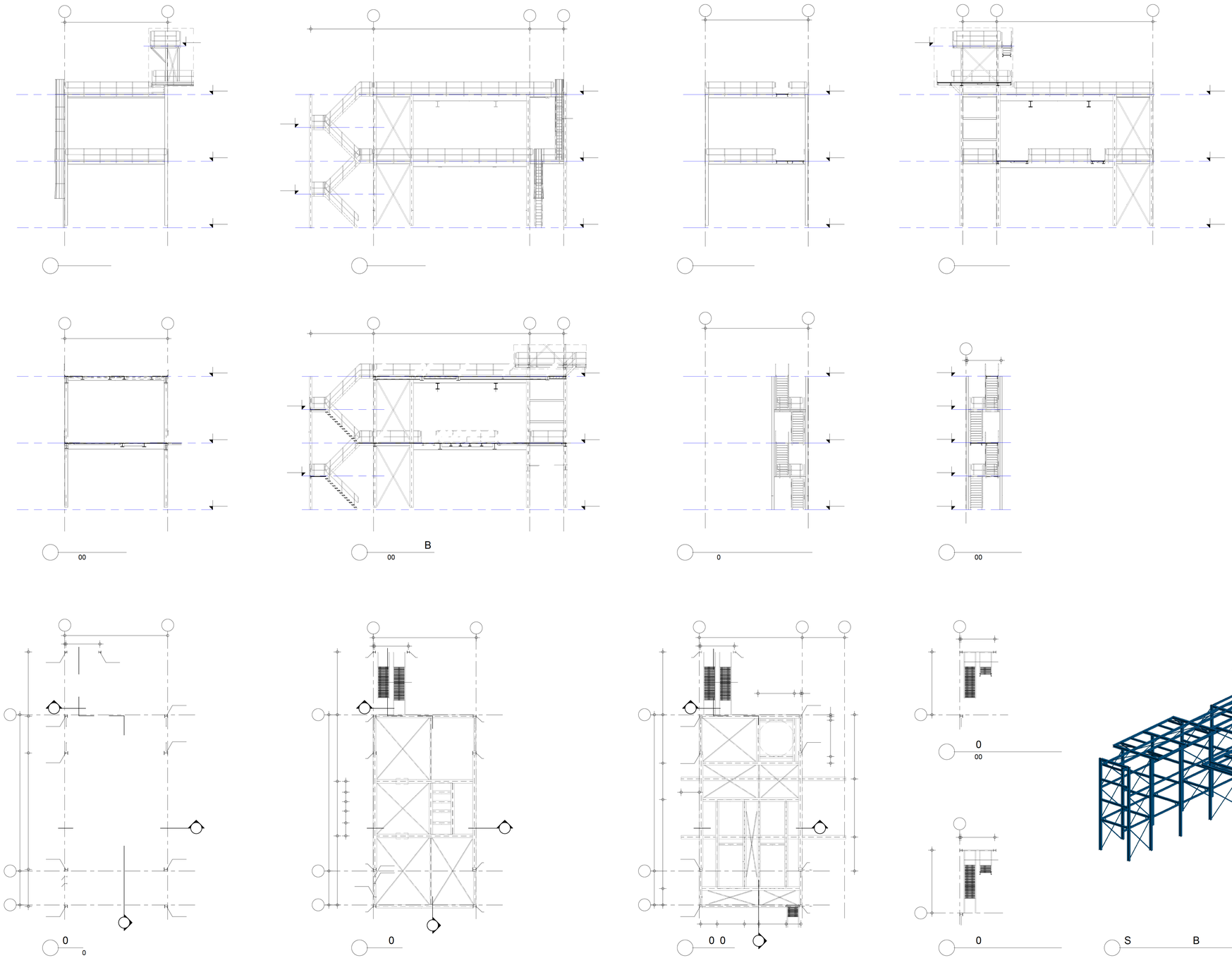
00
B
00
0
00
0
0
0
0 0
0
00
0
S
B

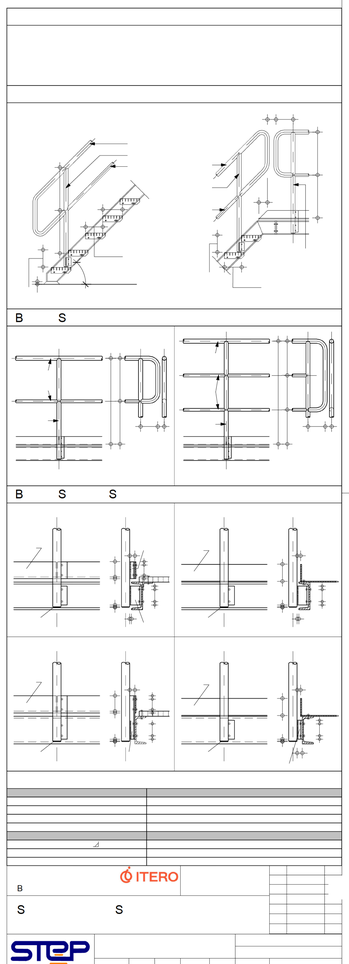
B
S
B
S
S
B
S
S
ITERO
STEP