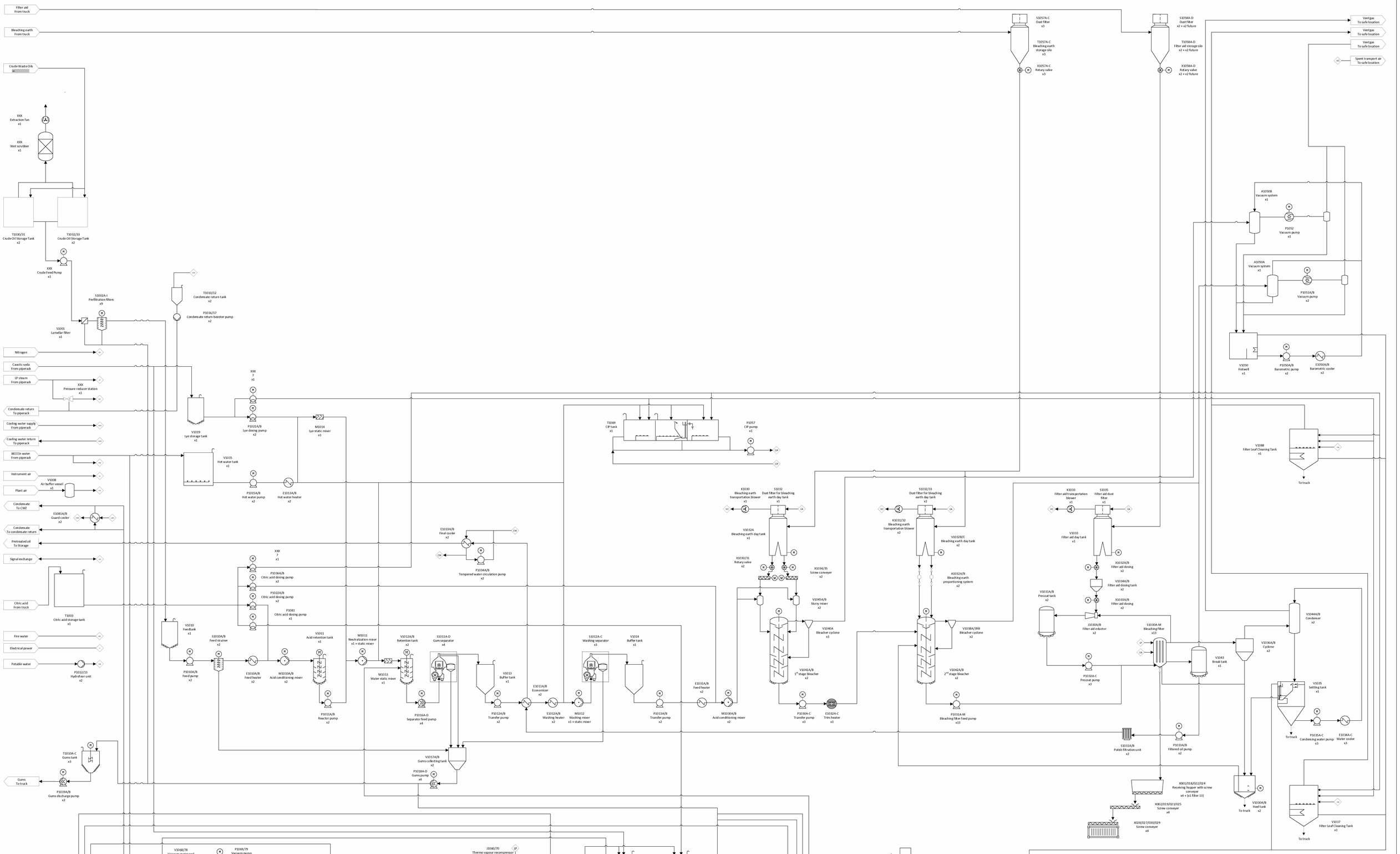

REVISIONS				
REV	DATE	DESCRIPTION	DRAWN	CHECKED
A	27/01/2021	Updated final remarks	[illegible]	[illegible]
B	07/05/2021	Updated final remarks	[illegible]	[illegible] cw
C	01/07/2021	Updated changes	[illegible]	[illegible] cw

BiLFINGER

Title:
Renewable Fuel Pre-Treatment Unit – Overall Project PFD

Client:	SIZE	PROJECT NO	DWG NO	REV
Shell Pernis	A0	T54306	31420D3	C
Project Name: Renewable Fuel Pre-Treatment Unit	SCALE 1:1	18/12/2020	SHEET 1 OF 1	